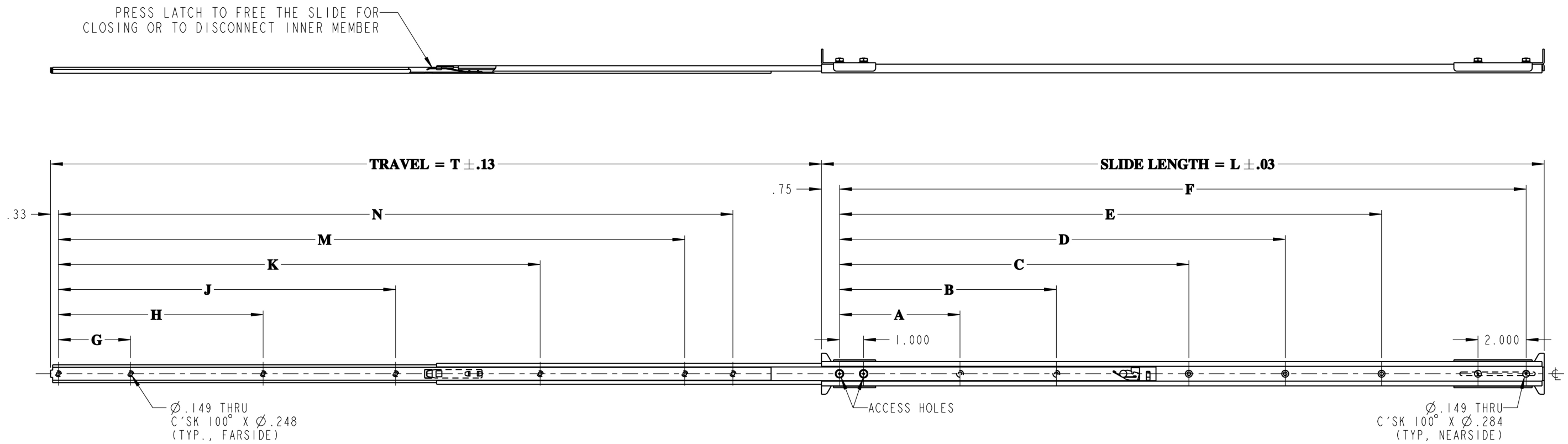

8. WHEN ORDERING SLIDE WITHOUT BRACKETS, SPECIFY PART NUMBER: 501QD-XX-1. FOR XX SEE TABLE TABULATION.
7. USE #6, 100° FLAT HEAD MACHINE SCREWS FOR MOUNTING THRU THE SLIDE MEMBERS.
6. SLIDE IS PROVIDED WITH BRACKETS SHOWN.
5. SLIDE IS SYMMETRICAL AND MAY BE USED AS A LEFT-HAND OR RIGHT-HAND MOUNTING UNIT.
4. SLIDE LOCKS IN OPEN POSITION AND IS PROVIDED WITH QUICK DISCONNECT OF CHASSIS SECTION.
3. THIS SLIDE IS A FRICTION SLIDE.
2. FINISH: ZINC PLATE.
1. MATERIAL: COLD ROLLED STEEL.

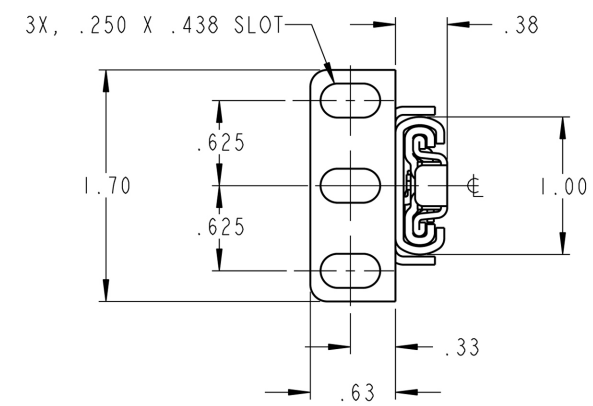

END VIEW

PART NO.	SLIDE LENGTH	SLIDE TRAVEL	CABINET SECTION						CHASSIS SECTION						LOAD RATING - PER PAIR
SERIES - LENGTH	L	T	A	B	C	D	E	F	G	H	J	K	M	N	
501QD-10	10.00	12.00	-	-	-	-	-	8.500	2.000	-	5.000	-	-	8.000	85 LBS
501QD-12	12.00	14.00	-	-	-	-	4.500	10.500	2.000	-	5.000	-	-	10.000	80 LBS
501QD-14	14.00	16.00	-	-	-	-	6.500	12.500	2.000	-	6.000	-	10.000	12.000	76 LBS
501QD-16	16.00	18.00	-	-	-	-	8.500	14.500	2.000	-	7.000	-	12.000	14.000	71 LBS
501QD-18	18.00	20.00	5.000	-	-	-	10.500	16.500	2.000	5.000	8.000	-	14.000	16.000	67 LBS
501QD-20	20.00	22.00	5.000	-	-	-	12.500	18.500	2.000	5.500	9.000	-	16.000	18.000	63 LBS
501QD-22	22.00	24.00	5.000	-	-	10.500	14.500	20.500	2.000	6.000	10.000	14.000	18.000	20.000	63 LBS
501QD-24	24.00	26.00	5.000	-	-	12.500	16.500	22.500	3.000	7.000	11.000	15.500	20.000	22.000	60 LBS
501QD-26	26.00	28.00	5.000	9.000	-	14.500	18.500	24.500	3.000	7.500	12.000	17.000	22.000	24.000	57 LBS
501QD-28	28.00	30.00	5.000	9.000	-	16.500	20.500	26.500	3.000	8.000	13.000	18.500	24.000	26.000	53 LBS
501QD-30	30.00	32.00	5.000	9.000	14.500	18.500	22.500	28.500	3.000	8.500	14.000	20.000	26.000	28.000	50 LBS

JONATHAN® Engineered Solutions

Irvine Technology Center
410 Exchange, Suite 200
Irvine, CA 92602
Tel. (714) 665-4400
Fax: (714) 368-7002
Website: www.jonathanengr.com
Engineer - Production - Integration/ Subassembly - Logistics
United States - Mexico - China - Taiwan

TOLERANCES UNLESS OTHERWISE NOTED				PART NUMBER :	DESCRIPTION :
.XX	.XXX	ANGLES	HOLES	501QD	STEEL SERIES 501QD LOAD RATING : 50-85 LBS.
± .03	± .010	± 2°	± .005	DATE : 1/11	
SHEET 1 OF 1					

COPYRIGHT © 2011 JONATHAN ENGINEERED SOLUTIONS

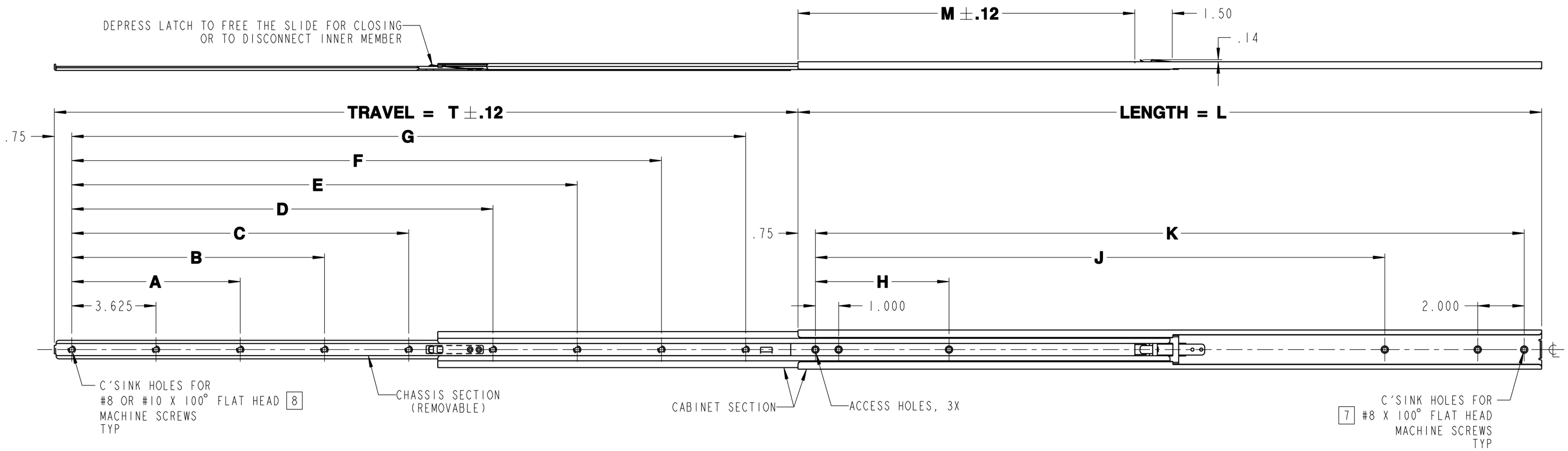

6. HOLES OTHER THAN THOSE SHOWN MAYBE IN THE SLIDE MEMBERS.

5. SLIDE IS SYMMETRICAL AND MAY BE USED AS A LEFT-HAND OR RIGHT-HAND MOUNTING UNIT.

4. SLIDE LOCKS IN OPEN POSITION AND IS PROVIDED WITH QUICK DISCONNECT OF CHASSIS SECTION.

3. THIS SLIDE IS A FRICTION SLIDE.

2. FINISH: STEEL: COMMERCIAL ZINC PLATE RoHS COMPLIANT
STAINLESS STEEL: PASSIVATING PER SAE-AMS-QQ-P-35

1. MATERIAL: COLD ROLLED STEEL
STAINLESS STEEL TYPE 300

10. RETMA BRACKET KIT BK-47
SEE ACCESSORY SECTION FOR BRACKET KIT DETAILS.

9. ESTIMATED SLIDE WEIGH IS .091 LBS/INCH.

8 USE #8 OR #10 X 100° FLAT HEAD MACHINE SCREWS FOR MOUNTING THRU THE INNER MEMBER (CHASSIS SECTION). WHEN USING A #10 SCREW, IT WILL NOT SEAT FLUSH AGAINST THE INSIDE OF THE INNER MEMBER.

7 USE #8 X 100° FLAT HEAD MACHINE SCREWS FOR MOUNTING THRU THE CABINET SECTION.

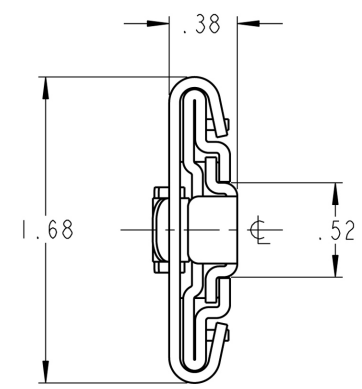

END VIEW

PART NUMBER		SLIDE LENGTH	SLIDE TRAVEL	CHASSIS SECTION							CABINET SECTION			LOCK LOCATION	LOAD RATING	
STEEL	STAINLESS STEEL	L	T	A	B	C	D	E	F	G	H	J	K	M	STEEL	STAINLESS STEEL
510QD-10	510QD-SS-10	10.00	10.00	7.250	-	-	-	-	-	-	-	-	8.500	3.50	95 lbs	105 lbs
510QD-12	510QD-SS-12	12.00	12.00	7.250	-	-	-	-	-	-	-	-	10.500	3.75	95 lbs	105 lbs
510QD-14	510QD-SS-14	14.00	14.00	-	10.875	-	-	-	-	-	-	-	12.500	5.50	90 lbs	100 lbs
510QD-16	510QD-SS-16	16.00	16.00	-	10.875	-	-	-	-	-	-	-	14.500	6.50	90 lbs	100 lbs
510QD-18	510QD-SS-18	18.00	18.00	7.250	10.875	14.500	-	-	-	-	5.750	10.500	16.500	7.25	90 lbs	100 lbs
510QD-20	510QD-SS-20	20.00	20.00	7.250	-	14.500	-	-	-	-	5.750	12.500	18.500	8.50	85 lbs	95 lbs
510QD-22	510QD-SS-22	22.00	22.00	7.250	-	14.500	18.125	-	-	-	5.750	14.500	20.500	9.50	85 lbs	95 lbs
510QD-24	510QD-SS-24	24.00	24.00	7.250	10.875	14.500	18.125	-	-	-	5.750	16.500	22.500	10.50	85 lbs	95 lbs
510QD-26	510QD-SS-26	26.00	26.00	7.250	10.875	14.500	18.125	21.750	-	-	5.750	18.500	24.500	11.00	80 lbs	90 lbs
510QD-28	510QD-SS-28	28.00	28.00	7.250	10.875	-	18.125	21.750	-	-	5.750	20.500	26.500	12.50	80 lbs	90 lbs
510QD-30	510QD-SS-30	30.00	30.00	7.250	10.875	-	18.125	21.750	25.375	-	5.750	22.500	28.500	13.50	75 lbs	85 lbs
510QD-32	510QD-SS-32	32.00	32.00	7.250	10.875	14.500	18.125	21.750	25.375	29.000	5.750	24.500	30.500	14.50	75 lbs	85 lbs

JONATHAN® Engineered Solutions

Irvine Technology Center
410 Exchange, Suite 200
Irvine, CA 92602
Tel. (714) 665-4400
Fax: (714) 368-7002
Website: www.jonathanengr.com
Engineer - Production - Integration/ Subassembly - Logistics
United States - Mexico - China - Taiwan

TOLERANCES UNLESS OTHERWISE NOTED			
.XX	.XXX	ANGLES	HOLES
± .03	± .010	± 2°	± .005

SHEET 1 OF 1

PART NUMBER : 510QD/510QD-SS

DATE : 1/11

DESCRIPTION : STEEL/STAINLESS STEEL SERIES 510QD LOAD RATING :

COPYRIGHT © 2011 JONATHAN ENGINEERED SOLUTIONS

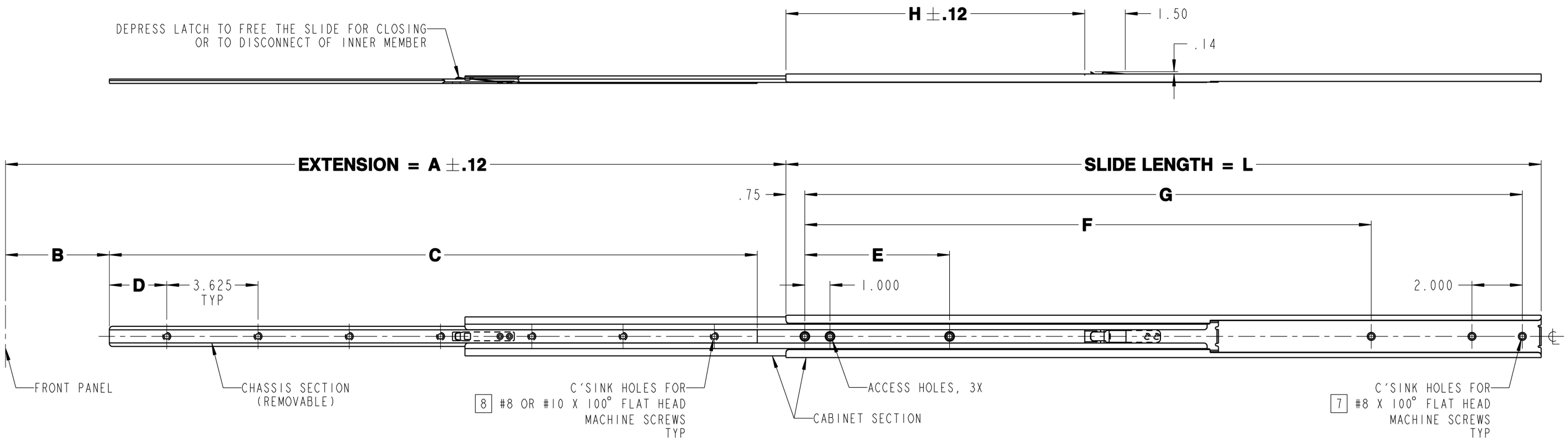

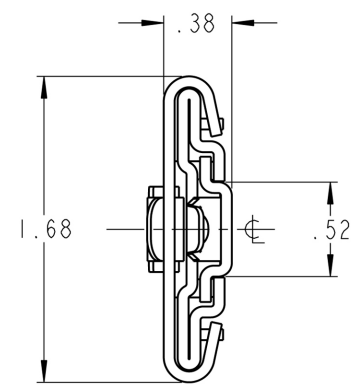

END VIEW

6. HOLES OTHER THAN THOSE SHOWN MAYBE IN THE SLIDE MEMBERS.

5. SLIDE IS SYMMETRICAL AND MAY BE USED AS A LEFT-HAND OR RIGHT-HAND MOUNTING UNIT.

4. SLIDE LOCKS IN OPEN POSITION AND IS PROVIDED WITH QUICK DISCONNECT OF CHASSIS SECTION.

3. THIS SLIDE IS A FRICTION SLIDE.

2. FINISH: STEEL: COMMERCIAL ZINC PLATE RoHS COMPLIANT
STAINLESS STEEL: PASSIVATING PER SAE-AMS-QQ-P-35

1. MATERIAL: COLD ROLLED STEEL
STAINLESS STEEL TYPE 300

10. RETMA BRACKET KIT BK-47
SEE ACCESSORY SECTION FOR BRACKET KIT DETAILS.

9. ESTIMATED SLIDE WEIGH IS .091 LBS/INCH.

8 USE #8 OR #10 X 100° FLAT HEAD MACHINE SCREWS FOR MOUNTING THRU THE INNER MEMBER (CHASSIS SECTION). WHEN USING A #10 SCREW, IT WILL NOT SEAT FLUSH AGAINST THE INSIDE OF THE INNER MEMBER.

7 USE #8 X 100° FLAT HEAD MACHINE SCREWS FOR MOUNTING THRU THE CABINET SECTION.

PART NUMBER		SLIDE LENGTH	(min)	(max)	(min)	(max)	CHASSIS SECTION		CABINET SECTION			LOCK LOCATION	LOAD RATING	
STEEL	STAINLESS STEEL	L	A		B		C	D	E	F	G	H	STEEL	STAINLESS STEEL
510QDG-14	510QDG-SS-14	14.00	15.00	15.00	0.13	0.13	13.74	1.16	-	-	12.500	2.87	90 lbs	100 lbs
510QDG-16	510QDG-SS-16	16.00	15.00	17.00	0.13	2.13	13.74	1.16	-	-	14.500	3.50	90 lbs	100 lbs
510QDG-18	510QDG-SS-18	18.00	15.00	19.00	0.13	4.13	13.74	1.16	-	-	16.500	3.50	90 lbs	100 lbs
510QDG-20	510QDG-SS-20	20.00	21.00	21.00	0.13	0.13	19.74	3.53	-	-	18.500	5.50	85 lbs	95 lbs
510QDG-22	510QDG-SS-22	22.00	21.00	23.00	0.13	2.13	19.74	3.53	5.750	14.500	20.500	7.50	85 lbs	95 lbs
510QDG-24	510QDG-SS-24	24.00	21.00	25.00	0.13	4.13	19.74	3.53	5.750	16.500	22.500	9.50	85 lbs	95 lbs
510QDG-26	510QDG-SS-26	26.00	27.00	27.00	0.13	0.13	25.74	2.28	5.750	18.500	24.500	7.87	80 lbs	90 lbs
510QDG-28	510QDG-SS-28	28.00	27.00	29.00	0.13	2.13	25.74	2.28	5.750	20.500	26.500	9.87	80 lbs	90 lbs
510QDG-30	510QDG-SS-30	30.00	27.00	31.00	0.13	4.13	25.74	2.28	5.750	22.500	28.500	11.87	75 lbs	85 lbs

JONATHAN® Engineered Solutions

Irvine Technology Center
410 Exchange, Suite 200
Irvine, CA 92602
Tel. (714) 665-4400
Fax: (714) 368-7002
Website: www.jonathanengr.com
Engineer - Production - Integration/ Subassembly - Logistics
United States - Mexico - China - Taiwan

TOLERANCES UNLESS OTHERWISE NOTED			
.XX	.XXX	ANGLES	HOLES
± .03	± .01	± 2°	± .005

SHEET 1 OF 1

PART NUMBER : 510QDG/ 510QDG-SS

DATE : 1/11

DESCRIPTION : STEEL/ STAINLESS STEEL 510QDG LOAD RATING :

COPYRIGHT © 2011 JONATHAN ENGINEERED SOLUTIONS

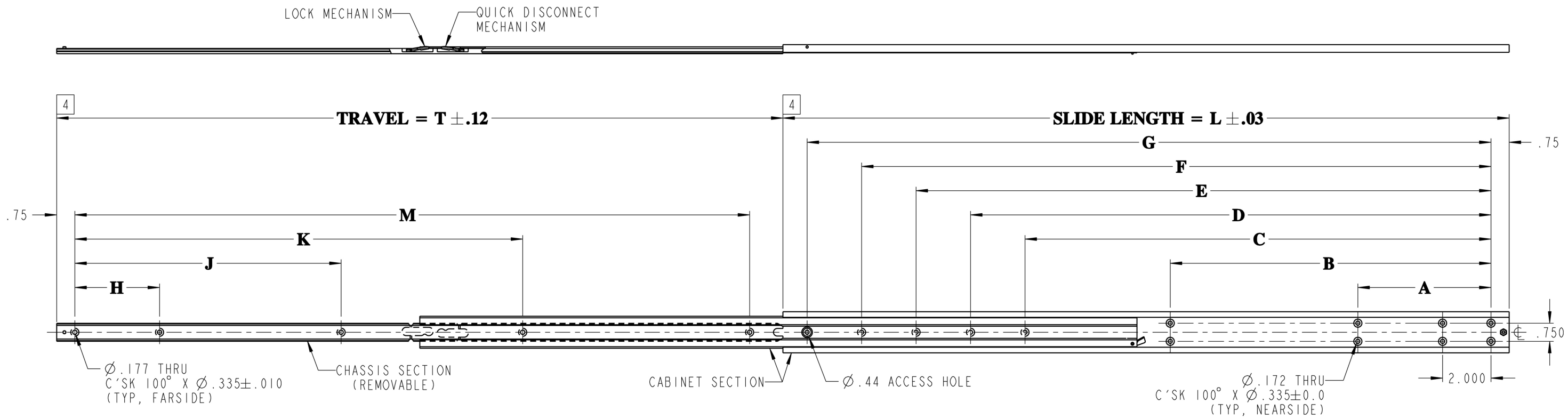

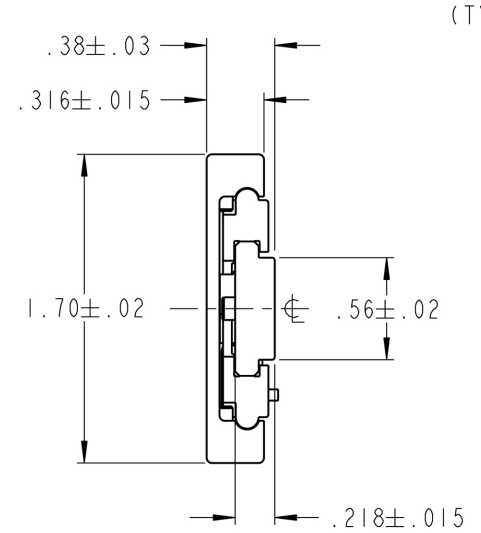

END VIEW

6. SLIDE SHOWN TO BE USED AS LEFT HAND SLIDE, WHEN USE AS A RIGHT HAND SLIDE REAR LOCK WILL BE ON TOP SIDE.

5. THIS SLIDE IS A FRICTION SLIDE.

[4] FOR REFERENCE PURPOSE ONLY, THESE SURFACES TO ALIGN WHEN SLIDE IS IN CLOSED POSITION.

3. SLIDE LOCKS IN OPEN POSITION ONLY AND IS PROVIDED WITH QUICK DISCONNECT OF CHASSIS SECTION.

2. FINISH: SLIDE INTERM. CHANNELS ARE ANODIZED PER MIL-A-8625, TYPE II, CLASS 2, DYED BLACK AND DRY FILM LUBRICATED PER MIL-PRF-46010 TI.
OUTER/ INNER CHANNELS AND ALUMINUM COMPONENTS ARE ANODIZED PER MIL-A-8625, TYPE II, CLASS I.
CRES COMPONENTS ARE PASSIVATED PER SAE-AMS-QQ-P-35.

1. MATERIAL: SLIDE CHANNELS ARE FABRICATED FROM ALUMINUM ALLOY 6061-T6.
COMPONENT PARTS ARE 302/303 CRES AND HIGH STRENGTH ALUMINUM.

PART NO.	SLIDE LENGTH	SLIDE TRAVEL	CABINET SECTION							CHASSIS SECTION				LOAD RATING - PER PAIR
SERIES - LENGTH	L	T	A	B	C	D	E	F	G	H	J	K	M	
515QD-10	10.00	10.00	4.000	-	6.000	-	-	-	8.250	2.500	-	-	7.875	135 LBS
515QD-12	12.00	12.00	4.000	-	8.000	-	-	-	10.250	3.500	-	-	9.875	130 LBS
515QD-14	14.00	14.00	5.500	-	10.000	-	-	-	12.250	3.500	-	9.000	11.875	125 LBS
515QD-16	16.00	16.00	5.500	-	9.750	12.000	-	-	14.250	3.500	-	10.000	13.875	120 LBS
515QD-18	18.00	18.00	5.500	-	9.500	11.750	14.000	-	16.250	3.500	6.000	12.500	15.875	115 LBS
515QD-20	20.00	20.00	5.500	-	11.500	13.750	16.000	-	18.250	3.500	7.000	13.500	17.875	110 LBS
515QD-22	22.00	22.00	5.500	-	13.500	15.750	18.000	-	20.250	3.500	8.000	14.500	19.875	105 LBS
515QD-24	24.00	24.00	5.500	-	13.250	15.500	17.750	20.000	22.250	3.500	9.000	15.500	21.875	100 LBS
515QD-26	26.00	26.00	5.500	10.250	15.250	17.500	19.750	22.000	24.250	3.500	10.000	16.500	23.875	95 LBS
515QD-28	28.00	28.00	5.500	12.250	17.250	19.500	21.750	24.000	26.250	3.500	10.000	17.500	25.875	90 LBS
515QD-30	30.00	30.00	5.500	13.250	19.250	21.500	23.750	26.000	28.250	3.500	11.000	18.500	27.875	80 LBS

JONATHAN® Engineered Solutions

Irvine Technology Center
410 Exchange, Suite 200
Irvine, CA 92602
Tel. (714) 665-4400
Fax: (714) 368-7002
Website: www.jonathanengr.com
Engineer - Production - Integration/ Subassembly - Logistics
United States - Mexico - China - Taiwan

TOLERANCES UNLESS OTHERWISE NOTED				PART NUMBER :	DESCRIPTION :
				515QD	ALUMINUM SERIES 515QD LOAD RATING : 80-135 LBS.
.XX	.XXX	ANGLES	HOLES	DATE :	
± .01	± .005	± 1°	± .005	1/11	
SHEET 1 OF 1					

COPYRIGHT © 2011 JONATHAN ENGINEERED SOLUTIONS