NOTES:

1. LEFT SLIDE AS SHOWN, RIGHT SLIDE OPPOSITE.
2. SLIDE IS PROVIDED WITH LOCK TYPE "F", LOCKS IN OPEN POSITION ONLY. (OPTIONAL)

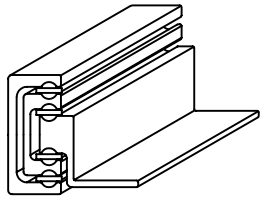

ISOMETRIC REPRESENTATION

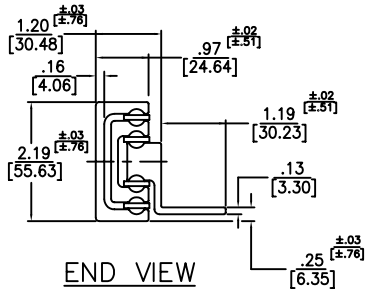

END VIEW

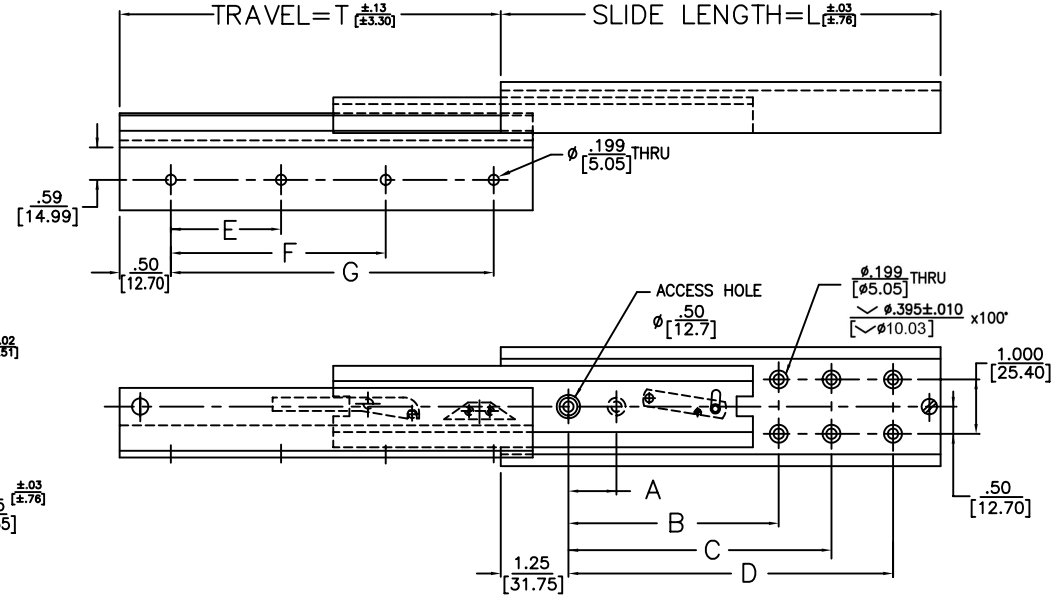

PART NO	SLIDE LENGTH	SLIDE TRAVEL	MOUNTING HOLE PATTERN							LOAD RATING
SERIES – LENGTH	DIM. L	DIM. T	OUTER MEMBER A	OUTER MEMBER B	OUTER MEMBER C	OUTER MEMBER D	INNER MEMBER E	INNER MEMBER F	INNER MEMBER G	PER PAIR
61–10	10	9			5	8	3	6	9	240 LBS
61L–10	254	228.6			127	203.2	76.2	152.4	228.6	108 KG
61–12	12	11			6	10	4	7	11	265 LBS
61L–12	304.8	279.4			152.4	254	101.6	177.8	279.4	120 KG
61–14	14	13			7	12	4	9	13	260 LBS
61L–14	355.6	330.2			177.8	304.8	101.6	228.6	330.2	117 KG
61–16	16	15	4	8	11	14	5	10	15	241 LBS
61L–16	406.4	381	101.6	203.2	279.4	355.6	127	254	381	109 KG
61–18	18	17	5	10	13	16	6	11	17	214 LBS
61L–18	457.2	431.8	127	254	330.2	406.4	152.4	279.4	431.8	97 KG
61–20	20	19	5	10	14	18	6	13	19	198 LBS
61L–20	508	482.6	127	254	355.6	457.2	152.4	330.2	482.6	89 KG
61–22	22	21	6	12	16	20	7	14	21	183 LBS
61L–22	558.8	533.4	152.4	304.8	406.4	508	177.8	355.6	533.4	83 KG
61–24	24	23	6	12	17	22	8	15	23	171 LBS
61L–24	609.6	584.2	152.4	304.8	431.8	558.8	203.2	381	584.2	77 KG
61–26	26	25	7	14	19	24	8	17	25	163 LBS
61L–26	660.4	635	177.8	355.6	482.6	609.6	203.2	431.8	635	73 KG
61–28	28	27	7	14	20	26	9	18	27	156 LBS
61L–28	711.2	685.8	177.8	355.6	508	660.4	228.6	457.2	685.8	70 KG
61–30	30	29	8	16	22	28	10	19	29	150 LBS
61L–30	762	736.6	203.2	406.4	558.8	711.2	254	482.6	736.6	68 KG
61–32	32	31	8	16	23	30	10	21	31	146 LBS
61L–32	812.8	787.4	203.2	406.4	584.2	762	254	533.4	787.4	66 KG
61–34	34	33	9	18	25	32	11	22	33	142 LBS
61L–34	863.6	838.2	228.6	457.2	635	812.8	279.4	558.8	838.2	64 KG
61–36	36	35	9	18	26	34	12	23	35	136 LBS
61L–36	914.4	889	228.6	457.2	660.4	863.6	304.8	584.2	889	61 KG

JONATHAN® Engineered Solutions
Irvine Technology Center
410 Exchange, Suite 200
Irvine, CA 92602
Tel: (714) 665–4400
Website: www.JonathanEngr.com
Engineering • Production • Integration/Subassembly • Logistics
United States • Mexico • China • Taiwan

DIMENSIONS SHOWN AS: IN. [MM]

TOLERANCE UNLESS OTHERWISE NOTED	
.XX / .X	±.010 [±.3]
.XXX / .XX	±.005 [±.13]
ANGLES	±1°

SERIES: 61

DATE: 1/11

DESCRIPTION:
ALUMINUM
SERIES 61
LOAD RATING: 136–265 LBS./ 61–120 KG.

COPYRIGHT © 2011 JONATHAN ENGINEERED SOLUTIONS

NOTES:

1. WHEN ORDERING WITH LOCK, SPECIFY L.H. OR R.H. (EX:62L–12L, 62L–12R) (LEFT SLIDE AS SHOWN, RIGHT SLIDE OPPOSITE)
2. SLIDE IS PROVIDED WITH LOCK TYPE "F". LOCKS IN OPEN POSITION ONLY. (OPTIONAL)

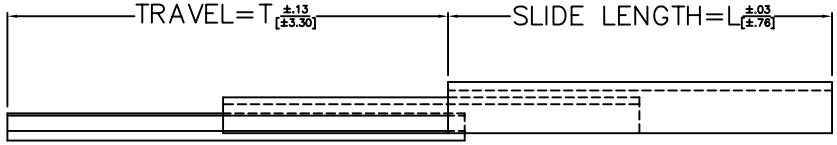

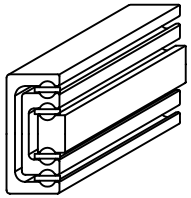

ISOMETRIC REPRESENTATION

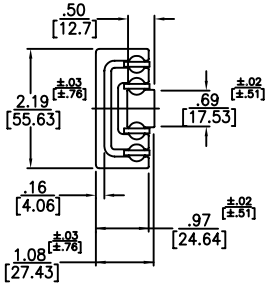

END VIEW

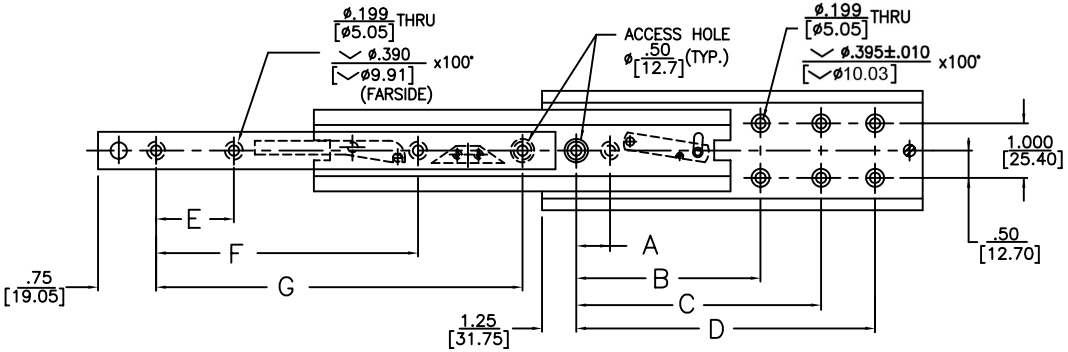

PART NO.	SLIDE LENGTH	SLIDE TRAVEL	MOUNTING HOLE PATTERN							LOAD RATING
SERIES – LENGTH	DIM. L	DIM. T	OUTER MEMBER A	OUTER MEMBER B	OUTER MEMBER C	OUTER MEMBER D	INNER MEMBER E	INNER MEMBER F	INNER MEMBER G	PER PAIR
62–10	10	9			5	8	2		8	240 LBS
62L–10	254	228.6			127	203.2	50.8		203.2	108 KG
62–12	12	11			6	10	3	9	10	265 LBS
62L–12	304.8	279.4			152.4	254	76.2	228.6	254	120 KG
62–14	14	13			7	12	4	10	12	260 LBS
62L–14	355.6	330.2			177.8	304.8	101.6	254	304.8	117 KG
62–16	16	15	4	8	11	14	5	11	14	241 LBS
62L–16	406.4	381	101.6	203.2	279.4	355.6	127	279.4	355.6	109 KG
62–18	18	17	5	10	13	16	6	12	16	214 LBS
62L–18	457.2	431.8	127	254	330.2	406.4	152.4	304.8	406.4	97 KG
62–20	20	19	5	10	14	18	7	13	18	198 LBS
62L–20	508	482.6	127	254	355.6	457.2	177.8	330.2	457.2	89 KG
62–22	22	21	6	12	16	20	8	14	20	183 LBS
62L–22	558.8	533.4	152.4	304.8	406.4	508	203.2	355.6	508	83 KG
62–24	24	23	6	12	17	22	8	15	22	171 LBS
62L–24	609.6	584.2	152.4	304.8	431.8	558.8	203.2	381	558.8	77 KG
62–26	26	25	7	14	19	24	9	16	24	163 LBS
62L–26	660.4	635	177.8	355.6	482.6	609.6	228.6	406.4	609.6	73 KG
62–28	28	27	7	14	20	26	10	17	26	156 LBS
62L–28	711.2	685.8	177.8	355.6	508	660.4	254	431.8	660.4	70 KG
62–30	30	29	8	16	22	28	10	19	28	150 LBS
62L–30	762	736.6	203.2	406.4	558.8	711.2	254	482.6	711.2	68 KG
62–32	32	31	8	16	23	30	11	20	30	146 LBS
62L–32	812.8	787.4	203.2	406.4	584.2	762	279.4	508	762	66 KG
62–34	34	33	9	18	25	32	12	21	32	142 LBS
62L–34	863.6	838.2	228.6	457.2	635	812.8	304.8	533.4	812.8	64 KG
62–36	36	35	9	18	26	34	12	23	34	136 LBS
62L–36	914.4	889	228.6	457.2	660.4	863.6	304.8	584.2	863.6	61 KG

JONATHAN® Engineered Solutions

Irvine Technology Center
410 Exchange, Suite 200
Irvine, CA 92602
Tel: (714) 665–4400
Website: www.JonathanEngr.com
Engineering • Production • Integration/Subassembly • Logistics
United States • Mexico • China • Taiwan

DIMENSIONS SHOWN AS: IN. [MM]	TOLERANCE UNLESS OTHERWISE NOTED
.XX / .X	±.010 [±.3]
.XXX / .XX	±.005 [±.13]
ANGLES	±1°

SERIES: 62

DATE: 1/11

DESCRIPTION:
ALUMINUM
SERIES 62
LOAD RATING: 136–265 LBS./ 61–120 KG.

COPYRIGHT © 2011 JONATHAN ENGINEERED SOLUTIONS

NOTES:

1. SLIDE IS SYMMETRICAL. MAY BE USED AS LEFT OR RIGHT HAND SLIDE.
2. FOR LOCKING DEVICES, SEE ACCESSORIES SECTION.

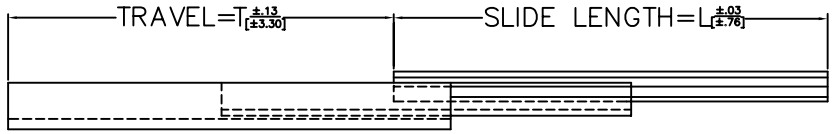

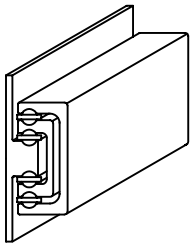

ISOMETRIC REPRESENTATION

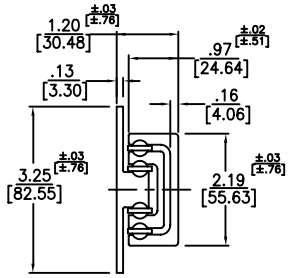

END VIEW

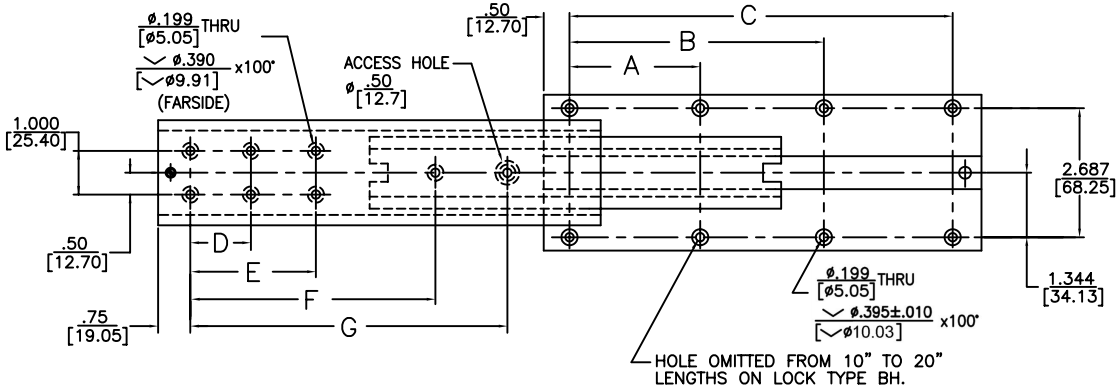

PART NO.	SLIDE LENGTH	SLIDE TRAVEL	MOUNTING HOLE PATTERN							LOAD RATING
SERIES LENGTH	DIM. L	DIM. T	INNER MEMBER A	B	C	OUTER MEMBER D	E	F	G	PER PAIR
63–10	10 / 254	9 / 228.6	3 / 76.2	6 / 152.4	9 / 228.6	3 / 76.2			8 / 203.2	240 LBS / 108 KG
63–12	12 / 304.8	11 / 279.4	4 / 101.6	7 / 177.8	11 / 279.4	4 / 101.6			10 / 254	265 LBS / 120 KG
63–14	14 / 355.6	13 / 330.2	4 / 101.6	9 / 228.6	13 / 330.2	5 / 127			12 / 304.8	260 LBS / 117 KG
63–16	16 / 406.4	15 / 381	5 / 127	10 / 254	15 / 381	3 / 76.2	6 / 152.4	10 / 254	14 / 355.6	241 LBS / 109 KG
63–18	18 / 457.2	17 / 431.8	6 / 152.4	11 / 279.4	17 / 431.8	3 / 76.2	6 / 152.4	11 / 279.4	16 / 406.4	214 LBS / 97 KG
63–20	20 / 508	19 / 482.6	6 / 152.4	13 / 330.2	19 / 482.6	4 / 101.6	8 / 203.2	13 / 330.2	18 / 457.2	198 LBS / 89 KG
63–22	22 / 558.8	21 / 533.4	7 / 177.8	14 / 355.6	21 / 533.4	4 / 101.6	8 / 203.2	14 / 355.6	20 / 508	183 LBS / 83 KG
63–24	24 / 609.6	23 / 584.2	8 / 203.2	15 / 381	23 / 584.2	5 / 127	10 / 254	16 / 406.4	22 / 558.8	171 LBS / 77 KG
63–26	26 / 660.4	25 / 635	8 / 203.2	17 / 431.8	25 / 635	5 / 127	10 / 254	17 / 431.8	24 / 609.6	163 LBS / 73 KG
63–28	28 / 711.2	27 / 685.8	9 / 228.6	18 / 457.2	27 / 685.8	6 / 152.4	12 / 304.8	19 / 482.6	26 / 660.4	156 LBS / 70 KG
63–30	30 / 762	29 / 736.6	10 / 254	19 / 482.6	29 / 736.6	6 / 152.4	12 / 304.8	20 / 508	28 / 711.2	150 LBS / 68 KG
63–32	32 / 812.8	31 / 787.4	10 / 254	21 / 533.4	31 / 787.4	7 / 177.8	14 / 355.6	22 / 558.8	30 / 762	146 LBS / 66 KG
63–34	34 / 863.6	33 / 838.2	11 / 279.4	22 / 558.8	33 / 838.2	7 / 177.8	14 / 355.6	23 / 584.2	32 / 812.8	142 LBS / 64 KG
63–36	36 / 914.4	35 / 889	12 / 304.8	23 / 584.2	35 / 889	8 / 203.2	16 / 406.4	25 / 635	34 / 863.6	136 LBS / 61 KG

JONATHAN® Engineered Solutions
Irvine Technology Center
410 Exchange, Suite 200
Irvine, CA 92602
Tel: (714) 665–4400
Website: www.JonathanEngr.com
Engineering • Production • Integration/Subassembly • Logistics
United States • Mexico • China • Taiwan

DIMENSIONS SHOWN AS: IN. / [MM]

TOLERANCE UNLESS OTHERWISE NOTED

.XX / .X	±.010 [±.3]
.XXX / .XX	±.005 [±.13]
ANGLES	±1°

SERIES: 63

DATE: 1/11

DESCRIPTION:

ALUMINUM
SERIES 63
LOAD RATING: 136–265 LBS./ 61–120 KG.

COPYRIGHT © 2011 JONATHAN ENGINEERED SOLUTIONS

NOTES:

1. LEFT SLIDE AS SHOWN, RIGHT SLIDE OPPOSITE.
2. SLIDE MAY BE PROVIDED WITH LOCK, CONTACT JONATHAN.

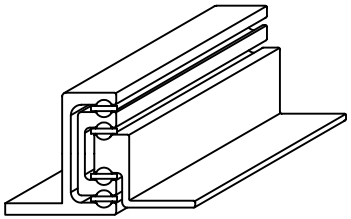

ISOMETRIC REPRESENTATION

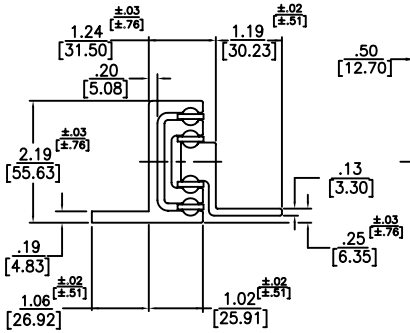

END VIEW

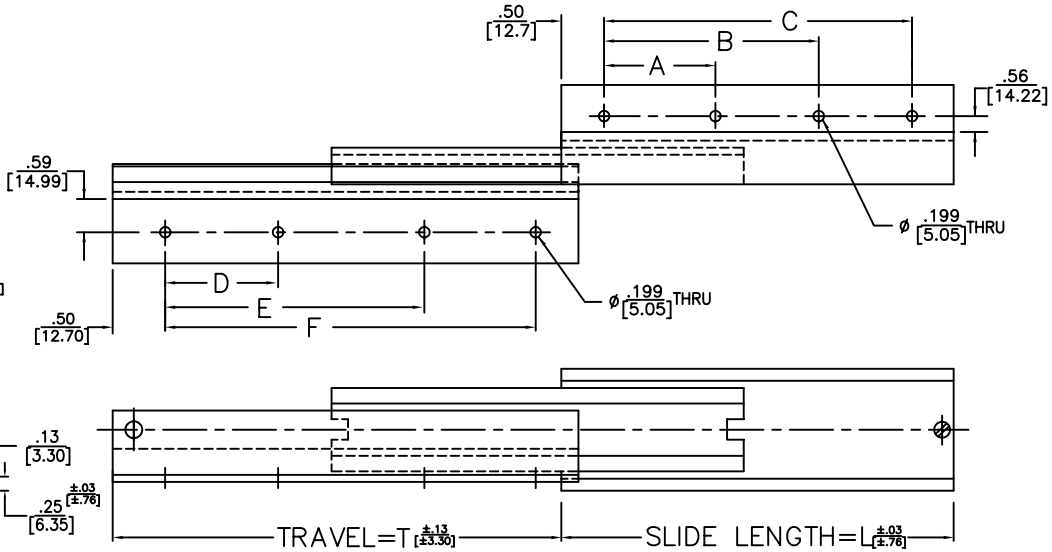

PART NO	SLIDE LENGTH	SLIDE TRAVEL	MOUNTING HOLE PATTERN						LOAD RATING
SERIES – LENGTH	DIM. L	DIM. T	OUTER MEMBER A	B	C	INNER MEMBER D	E	F	PER PAIR
65–10	10 / 254	9 / 228.6	3 / 76.2	6 / 152.4	9 / 228.6	3 / 76.2	6 / 152.4	9 / 228.6	240 LBS / 108 KG
65–12	12 / 304.8	11 / 279.4	4 / 101.6	7 / 177.8	11 / 279.4	4 / 101.6	7 / 177.8	11 / 279.4	265 LBS / 120 KG
65–14	14 / 355.6	13 / 330.2	4 / 101.6	9 / 228.6	13 / 330.2	4 / 101.6	9 / 228.6	13 / 330.2	260 LBS / 117 KG
65–16	16 / 406.4	15 / 381	5 / 127	10 / 254	15 / 381	5 / 127	10 / 254	15 / 381	241 LBS / 109 KG
65–18	18 / 457.2	17 / 431.8	6 / 152.4	11 / 279.4	17 / 431.8	6 / 152.4	11 / 279.4	17 / 431.8	214 LBS / 97 KG
65–20	20 / 508	19 / 482.6	6 / 152.4	13 / 330.2	19 / 482.6	6 / 152.4	13 / 330.2	19 / 482.6	198 LBS / 89 KG
65–22	22 / 558.8	21 / 533.4	7 / 177.8	14 / 355.6	21 / 533.4	7 / 177.8	14 / 355.6	21 / 533.4	183 LBS / 83 KG
65–24	24 / 609.6	23 / 584.2	8 / 203.2	15 / 381	23 / 584.2	8 / 203.2	15 / 381	23 / 584.2	171 LBS / 77 KG
65–26	26 / 660.4	25 / 635	8 / 203.2	17 / 431.8	25 / 635	8 / 203.2	17 / 431.8	25 / 635	163 LBS / 73 KG
65–28	28 / 711.2	27 / 685.8	9 / 228.6	18 / 457.2	27 / 685.8	9 / 228.6	18 / 457.2	27 / 685.8	156 LBS / 70 KG
65–30	30 / 762	29 / 736.6	10 / 254	19 / 482.6	29 / 736.6	10 / 254	19 / 482.6	29 / 736.6	150 LBS / 68 KG
65–32	32 / 812.8	31 / 787.4	10 / 254	21 / 533.4	31 / 787.4	10 / 254	21 / 533.4	31 / 787.4	146 LBS / 66 KG
65–34	34 / 863.6	33 / 838.2	11 / 279.4	22 / 558.8	33 / 838.2	11 / 279.4	22 / 558.8	33 / 838.2	142 LBS / 64 KG
65–36	36 / 914.4	35 / 889	12 / 304.8	23 / 584.2	35 / 889	12 / 304.8	23 / 584.2	35 / 889	136 LBS / 61 KG

JONATHAN® Engineered Solutions

Irvine Technology Center
410 Exchange, Suite 200
Irvine, CA 92602
Tel: (714) 665–4400
Website: www.JonathanEngr.com
Engineering • Production • Integration/Subassembly • Logistics
United States • Mexico • China • Taiwan

DIMENSIONS SHOWN AS: IN. / [MM]	TOLERANCE UNLESS OTHERWISE NOTED	SERIES	DESCRIPTION:
.XX / .X	±.010 [±.3]	65	ALUMINUM
.XXX / .XX	±.005 [±.13]	DATE: 1/11	SERIES 65
ANGLES	±1°		LOAD RATING: 136–265 LBS./ 61–120 KG.

COPYRIGHT © 2011 JONATHAN ENGINEERED SOLUTIONS

NOTES:

1. LEFT SLIDE AS SHOWN, RIGHT SLIDE OPPOSITE.
2. FOR LOCKING DEVICES, SEE ACCESSORIES SECTION.

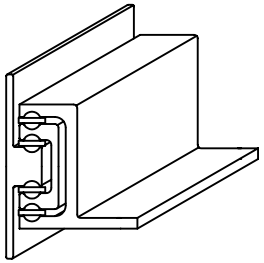

ISOMETRIC REPRESENTATION

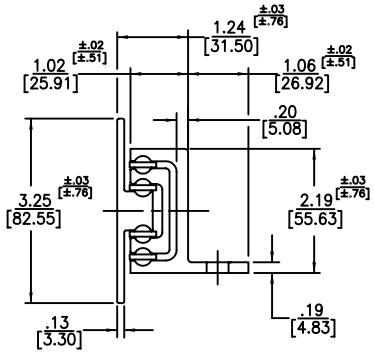

END VIEW

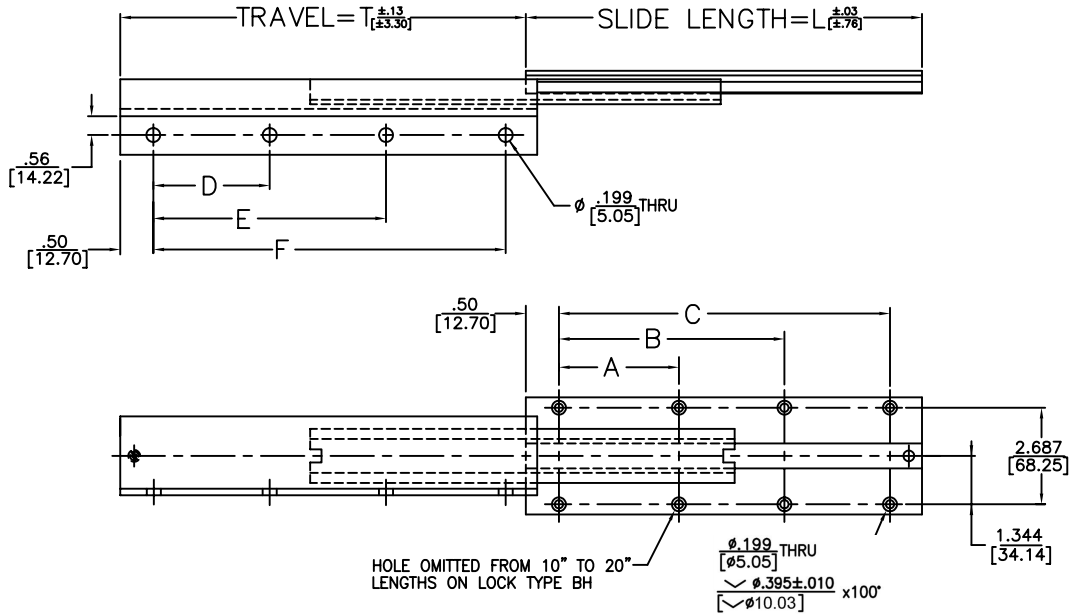

PART NO.	SLIDE LENGTH	SLIDE TRAVEL	MOUNTING HOLE PATTERN						LOAD RATING
SERIES – LENGTH	DIM. L	DIM. T	INNER MEMBER A	B	C	OUTER MEMBER D	E	F	PER PAIR
67–10	10 / 254	9 / 228.6	3 / 76.2	6 / 152.4	9 / 228.6	3 / 76.2	6 / 152.4	9 / 228.6	240 LBS / 108 KG
67–12	12 / 304.8	11 / 279.4	4 / 101.6	7 / 177.8	11 / 279.4	4 / 101.6	7 / 177.8	11 / 279.4	265 LBS / 120 KG
67–14	14 / 355.6	13 / 330.2	4 / 101.6	9 / 228.6	13 / 330.2	4 / 101.6	9 / 228.6	13 / 330.2	260 LBS / 117 KG
67–16	16 / 406.4	15 / 381	5 / 127	10 / 254	15 / 381	5 / 127	10 / 254	15 / 381	241 LBS / 109 KG
67–18	18 / 457.2	17 / 431.8	6 / 152.4	11 / 279.4	17 / 431.8	6 / 152.4	11 / 279.4	17 / 431.8	214 LBS / 97 KG
67–20	20 / 508	19 / 482.6	6 / 152.4	13 / 330.2	19 / 482.6	6 / 152.4	13 / 330.2	19 / 482.6	198 LBS / 89 KG
67–22	22 / 558.8	21 / 533.4	7 / 177.8	14 / 355.6	21 / 533.4	7 / 177.8	14 / 355.6	21 / 533.4	183 LBS / 83 KG
67–24	24 / 609.6	23 / 584.2	8 / 203.2	15 / 381	23 / 584.2	8 / 203.2	15 / 381	23 / 584.2	171 LBS / 77 KG
67–26	26 / 660.4	25 / 635	8 / 203.2	17 / 431.8	25 / 635	8 / 203.2	17 / 431.8	25 / 635	163 LBS / 73 KG
67–28	28 / 711.2	27 / 685.8	9 / 228.6	18 / 457.2	27 / 685.8	9 / 228.6	18 / 457.2	27 / 685.8	156 LBS / 70 KG
67–30	30 / 762	29 / 736.6	10 / 254	19 / 482.6	29 / 736.6	10 / 254	19 / 482.6	29 / 736.6	150 LBS / 68 KG
67–32	32 / 812.8	31 / 787.4	10 / 254	21 / 533.4	31 / 787.4	10 / 254	21 / 533.4	31 / 787.4	146 LBS / 66 KG
67–34	34 / 863.6	33 / 838.2	11 / 279.4	22 / 558.8	33 / 838.2	11 / 279.4	22 / 558.8	33 / 838.2	142 LBS / 64 KG
67–36	36 / 914.4	35 / 889	12 / 304.8	23 / 584.2	35 / 889	12 / 304.8	23 / 584.2	35 / 889	136 LBS / 61 KG

JONATHAN® Engineered Solutions

Irvine Technology Center
410 Exchange, Suite 200
Irvine, CA 92602
Tel: (714) 665–4400
Website: www.JonathanEngr.com
Engineering • Production • Integration/Subassembly • Logistics
United States • Mexico • China • Taiwan

DIMENSIONS SHOWN AS: IN. / [MM]	TOLERANCE UNLESS OTHERWISE NOTED
.XX / .X	±.010 / [±.3]
.XXX / .XX	±.005 / [±.13]
ANGLES	±1°

SERIES: 67

DATE: 1/11

DESCRIPTION:

ALUMINUM
SERIES 67
LOAD RATING: 136–265 LBS./ 61–120 KG.

COPYRIGHT © 2011 JONATHAN ENGINEERED SOLUTIONS

NOTES:

1. LEFT SLIDE AS SHOWN, RIGHT SLIDE OPPOSITE.
2. SLIDE MAY BE PROVIDED WITH LOCK, CONTACT JONATHAN.

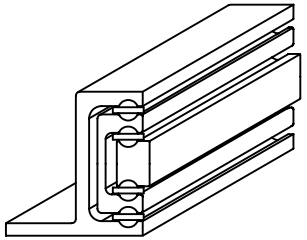

ISOMETRIC REPRESENTATION

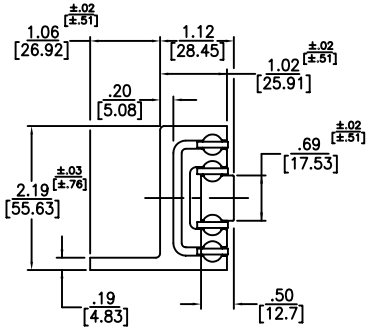

END VIEW

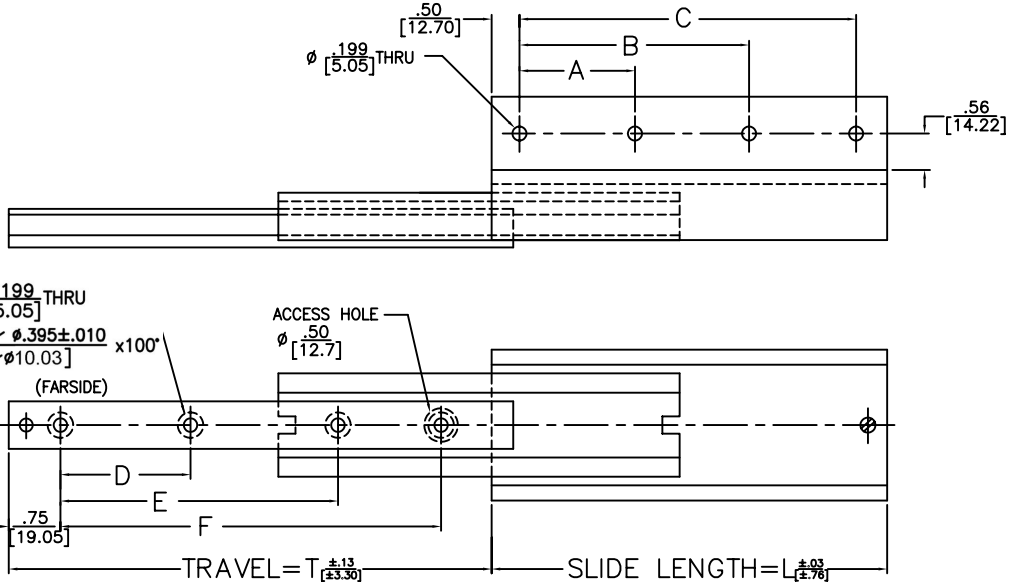

PART NO.	SLIDE LENGTH	SLIDE TRAVEL	MOUNTING HOLE PATTERN						LOAD RATING
SERIES – LENGTH	DIM. L	DIM. T	OUTER MEMBER A	B	C	INNER MEMBER D	E	F	PER PAIR
68–10	10 / 254	9 / 228.6	3 / 76.2	6 / 152.4	9 / 228.6	3 / 76.2	5 / 127	8 / 203.2	240 LBS / 108 KG
68–12	12 / 304.8	11 / 279.4	4 / 101.6	7 / 177.8	11 / 279.4	3 / 76.2	7 / 177.8	10 / 254	265 LBS / 120 KG
68–14	14 / 355.6	13 / 330.2	4 / 101.6	9 / 228.6	13 / 330.2	4 / 101.6	8 / 203.2	12 / 304.8	260 LBS / 117 KG
68–16	16 / 406.4	15 / 381	5 / 127	10 / 254	15 / 381	5 / 127	9 / 228.6	14 / 355.6	241 LBS / 109 KG
68–18	18 / 457.2	17 / 431.8	6 / 152.4	11 / 279.4	17 / 431.8	5 / 127	11 / 279.4	16 / 406.4	214 LBS / 97 KG
68–20	20 / 508	19 / 482.6	6 / 152.4	13 / 330.2	19 / 482.6	6 / 152.4	12 / 304.8	18 / 457.2	198 LBS / 89 KG
68–22	22 / 558.8	21 / 533.4	7 / 177.8	14 / 355.6	21 / 533.4	7 / 177.8	13 / 330.2	20 / 508	183 LBS / 83 KG
68–24	24 / 609.6	23 / 584.2	8 / 203.2	15 / 381	23 / 584.2	7 / 177.8	15 / 381	22 / 558.8	171 LBS / 77 KG
68–26	26 / 660.4	25 / 635	8 / 203.2	17 / 431.8	25 / 635	8 / 203.2	16 / 406.4	24 / 609.6	163 LBS / 73 KG
68–28	28 / 711.2	27 / 685.8	9 / 228.6	18 / 457.2	27 / 685.8	9 / 228.6	17 / 431.8	26 / 660.4	156 LBS / 70 KG
68–30	30 / 762	29 / 736.6	10 / 254	19 / 482.6	29 / 736.6	9 / 228.6	19 / 482.6	28 / 711.2	150 LBS / 68 KG
68–32	32 / 812.8	31 / 787.4	10 / 254	21 / 533.4	31 / 787.4	10 / 254	20 / 508	30 / 762	146 LBS / 66 KG
68–34	34 / 863.6	33 / 838.2	11 / 279.4	22 / 558.8	33 / 838.2	11 / 279.4	21 / 533.4	32 / 812.8	142 LBS / 64 KG
68–36	36 / 914.4	35 / 889	12 / 304.8	23 / 584.2	35 / 889	11 / 279.4	23 / 584.2	34 / 863.6	136 LBS / 61 KG

JONATHAN® Engineered Solutions

Irvine Technology Center
410 Exchange, Suite 200
Irvine, CA 92602
Tel: (714) 665–4400
Website: www.JonathanEngr.com
Engineering • Production • Integration/Subassembly • Logistics
United States • Mexico • China • Taiwan

DIMENSIONS SHOWN AS: IN. / [MM] TOLERANCE UNLESS OTHERWISE NOTED	
.XX / .X	±.010 / [±.3]
.XXX / .XX	±.005 / [±.13]
ANGLES	±1°

SERIES: 68

DATE: 1/11

DESCRIPTION:
ALUMINUM
SERIES 68
LOAD RATING: 136–265 LBS./ 61–120 KG.

COPYRIGHT © 2011 JONATHAN ENGINEERED SOLUTIONS

NOTES:

1. LEFT SLIDE AS SHOWN, RIGHT SLIDE OPPOSITE.
2. FOR LOCKING DEVICES, SEE ACCESSORIES SECTION.

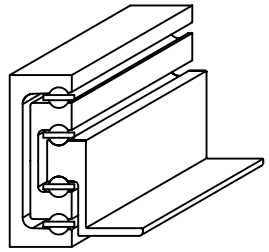

ISOMETRIC REPRESENTATION

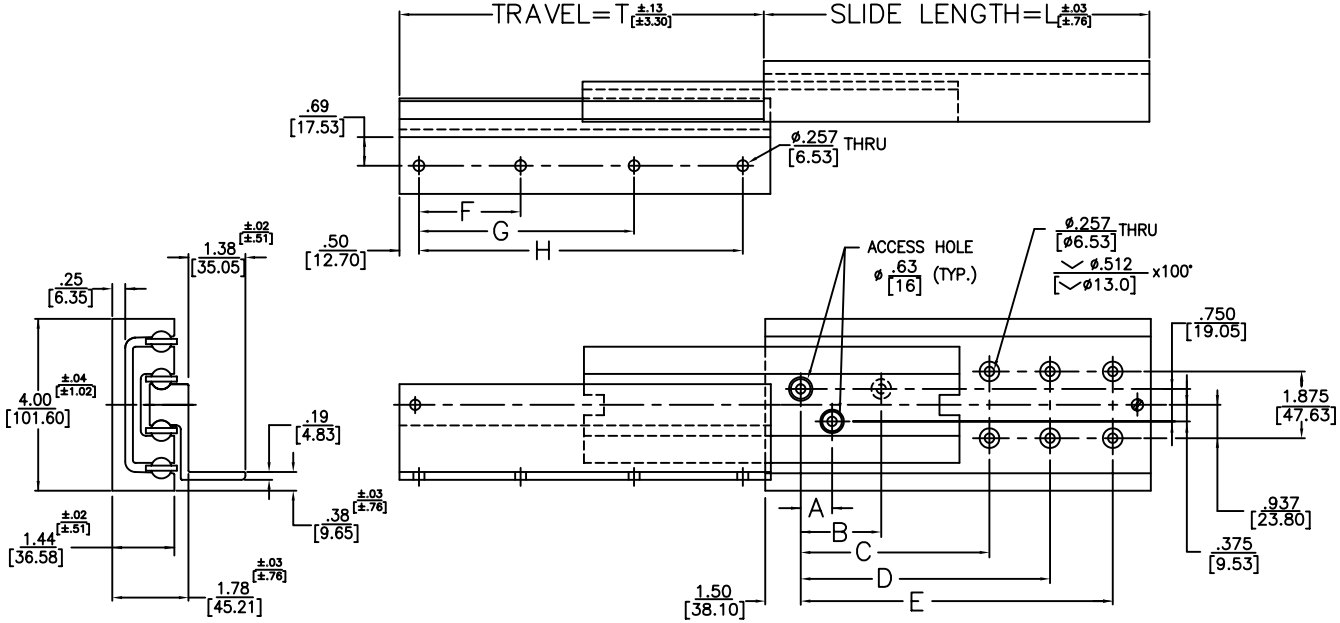

END VIEW

PART NO.	SLIDE LENGTH	SLIDE TRAVEL	MOUNTING HOLE PATTERN								LOAD RATING
SERIES – LENGTH	DIM. L	DIM. T	OUTER MEMBER A	B	C	D	E	INNER MEMBER F	G	H	PER PAIR
81–14	14 / 355.6	13 / 330.2	4 / 101.6			7 / 177.8	11 / 279.4	4 / 101.6	9 / 228.6	13 / 330.2	620LBS / 281 KG
81–16	16 / 406.4	15 / 381	4 / 101.6			8 / 203.2	13 / 330.2	5 / 127	10 / 254	15 / 381	610LBS / 276 KG
81–18	18 / 457.2	17 / 431.8	5 / 127			9 / 228.6	15 / 381	6 / 152.4	11 / 279.4	17 / 431.8	530LBS / 240 KG
81–20	20 / 508	19 / 482.6	6 / 152.4			11 / 279.4	17 / 431.8	6 / 152.4	13 / 330.2	19 / 482.6	475LBS / 215 KG
81–22	22 / 558.8	21 / 533.4	4 / 101.6	7 / 177.8	11 / 279.4	15 / 381	19 / 482.6	7 / 177.8	14 / 355.6	21 / 533.4	440LBS / 199 KG
81–24	24 / 609.6	23 / 584.2	5 / 127	9 / 288.6	13 / 330.2	17 / 431.8	21 / 533.4	8 / 203.2	15 / 381	23 / 584.2	415LBS / 188 KG
81–26	26 / 660.4	25 / 635	5 / 127	9 / 228.6	13 / 330.2	18 / 457.2	23 / 584.2	8 / 203.2	17 / 431.8	25 / 635	395LBS / 179 KG
81–28	28 / 711.2	27 / 685.8	6 / 152.4	11 / 279.4	15 / 381	20 / 508	25 / 635	9 / 228.6	18 / 457.2	27 / 685.8	385LBS / 174 KG
81–30	30 / 762	29 / 736.6	6 / 152.4	11 / 279.4	15 / 381	21 / 533.4	27 / 685.8	10 / 254	19 / 482.6	29 / 736.6	375LBS / 170 KG
81–32	32 / 812.8	31 / 787.4	6 / 152.4	11 / 279.4	17 / 431.8	23 / 584.2	29 / 736.6	10 / 254	21 / 533.4	31 / 787.4	365LBS / 165 KG
81–34	34 / 863.6	33 / 838.2	6 / 152.4	11 / 279.4	17 / 431.8	24 / 609.6	31 / 787.4	11 / 279.4	22 / 558.8	33 / 838.2	360LBS / 163 KG
81–36	36 / 914.4	35 / 889	7 / 177.8	13 / 330.2	19 / 482.6	26 / 660.4	33 / 838.2	12 / 304.8	23 / 584.2	35 / 889	355LBS / 161 KG

JONATHAN® Engineered Solutions
Irvine Technology Center
410 Exchange, Suite 200
Irvine, CA 92602
Tel: (714) 665–4400
Website: www.JonathanEngr.com
Engineering • Production • Integration/Subassembly • Logistics
United States • Mexico • China • Taiwan

DIMENSIONS SHOWN AS: IN. / [MM]	TOLERANCE UNLESS OTHERWISE NOTED
.XX / .X	±.010 / [±.3]
.XXX / .XX	±.005 / [±.13]
ANGLES	±1°

SERIES: 81

DATE: 1/11

DESCRIPTION:

ALUMINUM

SERIES 81

LOAD RATING: 355–620 LBS./ 161–281 KG.

COPYRIGHT © 2011 JONATHAN ENGINEERED SOLUTIONS

NOTES:

1. LEFT SLIDE AS SHOWN, RIGHT SLIDE OPPOSITE.
2. SLIDE CAN BE PROVIDED WITH LOCK TYPE "F". LOCKS IN OPEN POSITION ONLY. (OPTIONAL). "L" USED AS PART NO. MODIFIER.

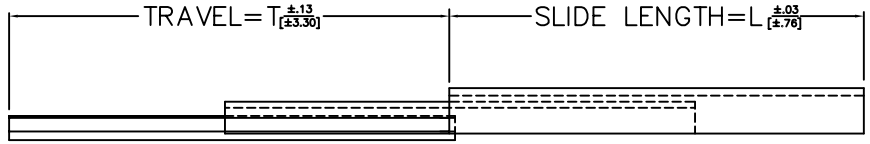

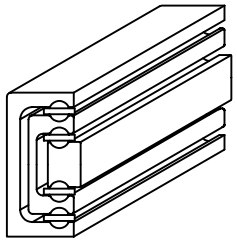

ISOMETRIC REPRESENTATION

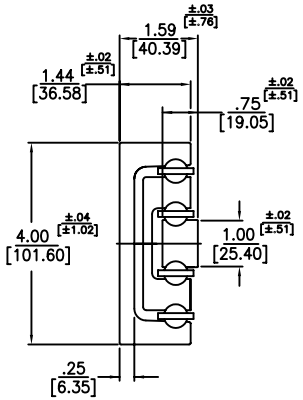

END VIEW

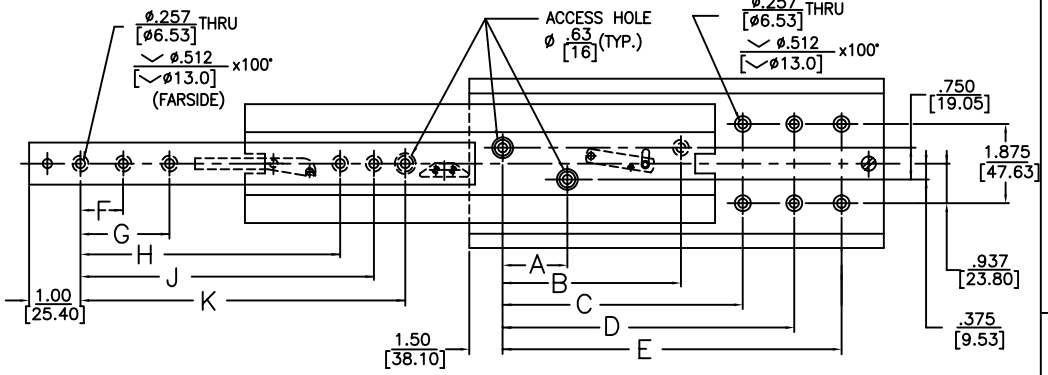

PART NO.	SLIDE LENGTH	SLIDE TRAVEL	MOUNTING HOLE PATTERN										LOAD RATING
SERIES – LENGTH	DIM. L	DIM. T	OUTER MEMBER A	B	C	D	E	INNER MEMBER F	G	H	J	K	PER PAIR
82–14 / 82L–14	14 / 355.6	13 / 330.2	4 / 101.6			7 / 177.8	11 / 279.4	4 / 101.6			9 / 228.6	11 / 279.4	620 LBS / 281 KG
82–16 / 82L–16	16 / 406.4	15 / 381	4 / 101.6			8 / 203.2	13 / 330.2	5 / 127			10 / 254	13 / 330.2	610 LBS / 276 KG
82–18 / 82L–18	18 / 457.2	17 / 431.8	5 / 127			9 / 228.6	15 / 381	6 / 152.4			11 / 279.4	15 / 381	530 LBS / 240 KG
82–20 / 82L–20	20 / 508	19 / 482.6	6 / 152.4			11 / 279.4	17 / 431.8	4 / 101.6	7 / 177.8	12 / 304.8	14 / 355.6	17 / 431.8	475 LBS / 215 KG
82–22 / 82L–22	22 / 558.8	21 / 533.4	4 / 101.6	7 / 177.8	11 / 279.4	15 / 381	19 / 482.6	4 / 101.6	8 / 203.2	13 / 330.2	16 / 406.4	19 / 482.6	440 LBS / 199 KG
82–24 / 82L–24	24 / 609.6	23 / 584.2	5 / 127	9 / 228.6	13 / 330.2	17 / 431.8	21 / 533.4	5 / 127	9 / 228.6	14 / 355.6	17 / 431.8	21 / 533.4	415 LBS / 188 KG
82–26 / 82L–26	26 / 660.4	25 / 635	5 / 127	9 / 228.6	13 / 330.2	18 / 457.2	23 / 584.2	5 / 127	10 / 254	15 / 381	19 / 482.6	23 / 584.2	395 LBS / 179 KG
82–28 / 82L–28	28 / 711.2	27 / 685.8	6 / 152.4	11 / 279.4	15 / 381	20 / 508	25 / 635	6 / 152.4	11 / 279.4	16 / 406.4	20 / 508	25 / 635	385 LBS / 174 KG
82–30 / 82L–30	30 / 762	29 / 736.6	6 / 152.4	11 / 297.4	15 / 381	21 / 533.4	27 / 685.8	6 / 152.4	12 / 304.8	17 / 431.8	22 / 558.8	27 / 685.8	375 LBS / 170 KG
82–32 / 82L–32	32 / 812.8	31 / 787.4	6 / 152.4	11 / 279.4	17 / 431.8	23 / 584.2	29 / 736.6	7 / 177.8	13 / 330.2	18 / 457.2	23 / 584.2	29 / 736.6	365 LBS / 165 KG
82–34 / 82L–34	34 / 863.6	33 / 838.2	6 / 152.4	11 / 279.4	17 / 431.8	24 / 609.6	31 / 787.4	7 / 177.8	14 / 355.6	19 / 482.6	25 / 635	31 / 787.4	360 LBS / 163 KG
82–36 / 82L–36	36 / 914.4	35 / 889	7 / 177.8	13 / 330.2	19 / 482.6	26 / 660.4	33 / 838.2	8 / 203.2	15 / 381	20 / 508	26 / 660.4	33 / 838.2	355 LBS / 161 KG

JONATHAN® Engineered Solutions

Irvine Technology Center
410 Exchange, Suite 200
Irvine, CA 92602
Tel: (714) 665–4400
Website: www.JonathanEngr.com
Engineering • Production • Integration/Subassembly • Logistics
United States • Mexico • China • Taiwan

DIMENSIONS SHOWN AS: IN. / [MM] — TOLERANCE UNLESS OTHERWISE NOTED	
.XX / .X	±.010 / [±.3]
.XXX / .XX	±.005 / [±.13]
ANGLES	±1°

SERIES: 82

DATE: 1/11

DESCRIPTION:

ALUMINUM
SERIES 82
LOAD RATING: 355–620 LBS./ 161–281 KG.

COPYRIGHT © 2011 JONATHAN ENGINEERED SOLUTIONS

NOTES:

1. SLIDE IS SYMMETRICAL. MAY BE USED AS LEFT OR RIGHT HAND SLIDE.
2. FOR LOCKING DEVICES, SEE ACCESSORIES SECTION.

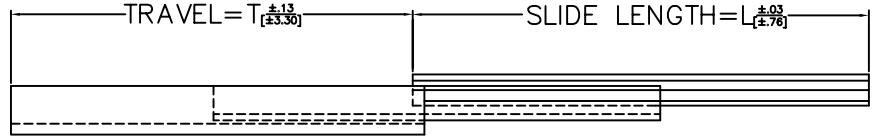

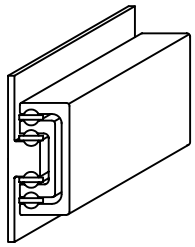

ISOMETRIC REPRESENTATION

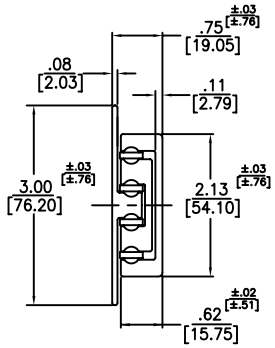

END VIEW

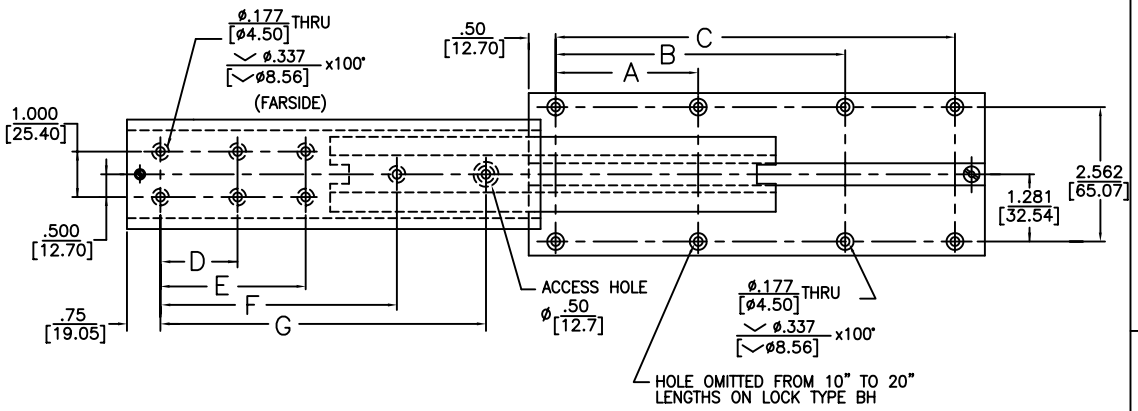

PART NO	SLIDE LENGTH	SLIDE TRAVEL	MOUNTING HOLE PATTERN							LOAD RATING
SERIES – LENGTH	DIM. L	DIM. T	INNER MEMBER A	B	C	OUTER MEMBER D	E	F	G	PER PAIR
93–10	10 / 254	9 / 228.6	3 / 76.2	6 / 152.4	9 / 228.6	3 / 76.2			8 / 203.2	129LBS / 58 KG
93–12	12 / 304.8	11 / 279.4	4 / 101.6	7 / 177.8	11 / 279.4	4 / 101.6			10 / 254	138LBS / 62 KG
93–14	14 / 355.6	13 / 330.2	4 / 101.6	9 / 228.6	13 / 330.2	5 / 127			12 / 304.8	132LBS / 59 KG
93–16	16 / 406.4	15 / 381	5 / 127	10 / 254	15 / 381	3 / 76.2	6 / 152.4	10 / 254	14 / 355.6	124LBS / 56 KG
93–18	18 / 457.2	17 / 431.8	6 / 152.4	11 / 279.4	17 / 431.8	3 / 76.2	6 / 152.4	11 / 279.4	16 / 406.4	108LBS / 48 KG
93–20	20 / 508	19 / 482.6	6 / 152.4	13 / 330.2	19 / 482.6	4 / 101.6	8 / 203.2	13 / 330.2	18 / 457.2	97 LBS / 43 KG
93–22	22 / 558.8	21 / 533.4	7 / 177.8	14 / 355.6	21 / 533.4	4 / 101.6	8 / 203.2	14 / 355.6	20 / 508	88 LBS / 39 KG
93–24	24 / 609.6	23 / 584.2	8 / 203.2	15 / 381	23 / 584.2	5 / 127	10 / 254	16 / 406.4	22 / 558.8	84 LBS / 38 KG
93–26	26 / 660.4	25 / 635	8 / 203.2	17 / 431.8	25 / 635	5 / 127	10 / 254	17 / 431.8	24 / 609.6	81 LBS / 36 KG
93–28	28 / 711.2	27 / 685.8	9 / 228.6	18 / 457.2	27 / 685.8	6 / 152.4	12 / 304.8	19 / 482.6	26 / 660.4	78 LBS / 35 KG
93–30	30 / 762	29 / 736.6	10 / 254	19 / 482.6	29 / 736.6	6 / 152.4	12 / 304.8	20 / 508	28 / 711.2	76 LBS / 34 KG
93–32	32 / 812.8	31 / 787.4	10 / 254	21 / 533.4	31 / 787.4	7 / 177.8	14 / 355.6	22 / 558.8	30 / 762	74 LBS / 33 KG
93–34	34 / 863.6	33 / 838.2	11 / 279.4	22 / 558.8	33 / 838.2	7 / 177.8	14 / 355.6	23 / 584.2	32 / 812.8	72 LBS / 32 KG
93–36	36 / 914.4	35 / 889	12 / 304.8	23 / 584.2	35 / 889	8 / 203.2	16 / 406.4	25 / 635	34 / 863.6	69 LBS / 31 KG

JONATHAN® Engineered Solutions
Irvine Technology Center
410 Exchange, Suite 200
Irvine, CA 92602
Tel: (714) 665–4400
Website: www.JonathanEngr.com
Engineering • Production • Integration/Subassembly • Logistics
United States • Mexico • China • Taiwan

DIMENSIONS SHOWN AS: IN. / [MM]

TOLERANCE UNLESS OTHERWISE NOTED

.XX / .X	±.010 / [±.3]
.XXX / .XX	±.005 / [±.13]
ANGLES	±1°

SERIES: 93

DATE: 1/11

DESCRIPTION:

ALUMINUM
SERIES 93
LOAD RATING: 69–138 LBS./ 31–62 KG.

COPYRIGHT © 2011 JONATHAN ENGINEERED SOLUTIONS

NOTES:

1. LEFT SLIDE AS SHOWN, RIGHT SLIDE OPPOSITE.
2. FOR LOCKING DEVICES, SEE ACCESSORIES SECTION.

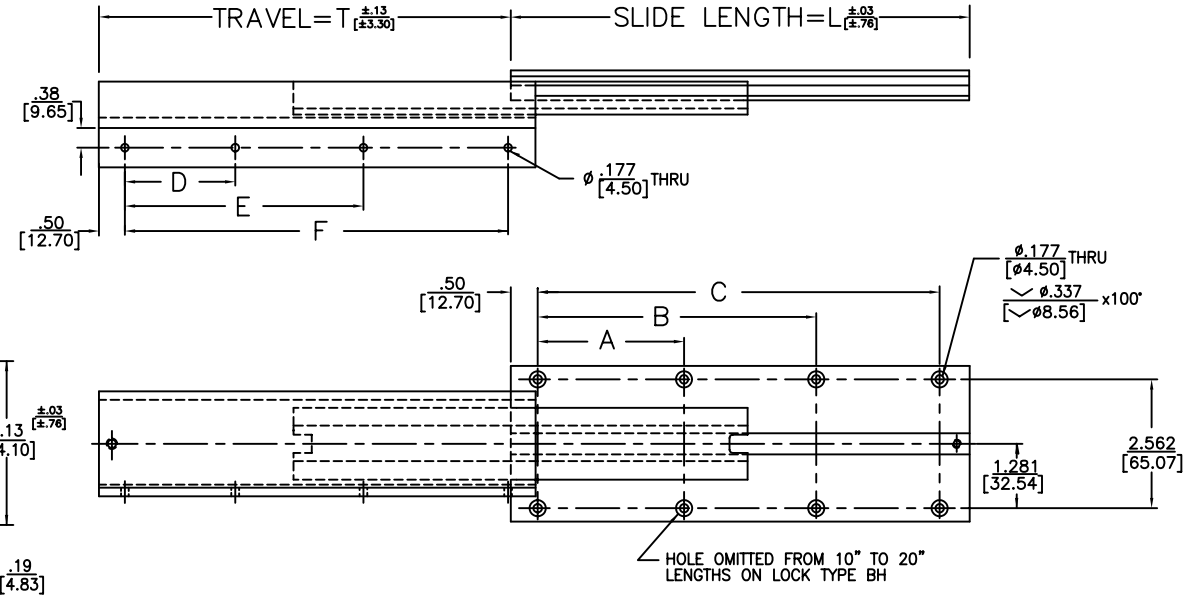

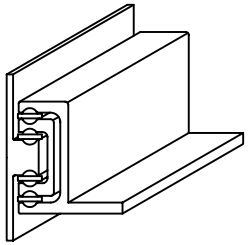

ISOMETRIC REPRESENTATION

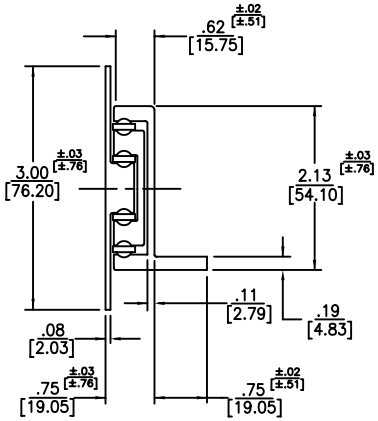

END VIEW

PART NO.	SLIDE LENGTH	SLIDE TRAVEL	MOUNTING HOLE PATTERN						LOAD RATING
SERIES – LENGTH	DIM. L	DIM. T	INNER MEMBER A	B	C	OUTER MEMBER D	E	F	PER PAIR
98–10	10 / 254	9 / 228.6	3 / 76.2	6 / 152.4	9 / 228.6	3 / 76.2	6 / 152.4	9 / 228.6	129LBS / 58 KG
98–12	12 / 304.8	11 / 279.4	4 / 101.6	7 / 177.8	11 / 279.4	4 / 101.6	7 / 177.8	11 / 279.4	138LBS / 62 KG
98–14	14 / 355.6	13 / 330.2	4 / 101.6	9 / 228.6	13 / 330.2	4 / 101.6	9 / 228.6	13 / 330.2	132LBS / 59 KG
98–16	16 / 406.4	15 / 381	5 / 127	10 / 254	15 / 381	5 / 127	10 / 254	15 / 381	124LBS / 56 KG
98–18	18 / 457.2	17 / 431.8	6 / 152.4	11 / 279.4	17 / 431.8	6 / 152.4	11 / 279.4	17 / 431.8	108LBS / 48 KG
98–20	20 / 508	19 / 482.6	6 / 152.4	13 / 330.2	19 / 482.6	6 / 152.4	13 / 330.2	19 / 482.6	97 LBS / 43 KG
98–22	22 / 558.8	21 / 533.4	7 / 177.8	14 / 355.6	21 / 533.4	7 / 177.8	14 / 355.6	21 / 533.4	88 LBS / 39 KG
98–24	24 / 609.6	23 / 584.2	8 / 203.2	15 / 381	23 / 584.2	8 / 203.2	15 / 381	23 / 584.2	84 LBS / 38 KG
98–26	26 / 660.4	25 / 635	8 / 203.2	17 / 431.8	25 / 635	8 / 203.2	17 / 431.8	25 / 635	81 LBS / 36 KG
98–28	28 / 711.2	27 / 685.8	9 / 228.6	18 / 457.2	27 / 685.8	9 / 228.6	18 / 457.2	27 / 685.8	78 LBS / 35 KG
98–30	30 / 762	29 / 736.6	10 / 254	19 / 482.6	29 / 736.6	10 / 254	19 / 482.6	29 / 736.6	76 LBS / 34 KG
98–32	32 / 812.8	31 / 787.4	10 / 254	21 / 533.4	31 / 787.4	10 / 254	21 / 533.4	31 / 787.4	74 LBS / 33 KG
98–34	34 / 863.6	33 / 838.2	11 / 279.4	22 / 558.8	33 / 838.2	11 / 279.4	22 / 558.8	33 / 838.2	72 LBS / 32 KG
98–36	36 / 914.4	35 / 889	12 / 304.8	23 / 584.2	35 / 889	12 / 304.8	23 / 584.2	35 / 889	69 LBS / 31 KG

JONATHAN® Engineered Solutions

Irvine Technology Center
410 Exchange, Suite 200
Irvine, CA 92602
Tel: (714) 665–4400
Website: www.JonathanEngr.com
Engineering • Production • Integration/Subassembly • Logistics
United States • Mexico • China • Taiwan

DIMENSIONS SHOWN AS: IN. / [MM]	TOLERANCE UNLESS OTHERWISE NOTED
.XX / .X	±.010 / [±.3]
.XXX / .XX	±.005 / [±.13]
ANGLES	±1°

SERIES: 98

DATE: 1/11

DESCRIPTION:

ALUMINUM

SERIES 98

LOAD RATING: 69–138 LBS./ 31–62 KG.

COPYRIGHT © 2011 JONATHAN ENGINEERED SOLUTIONS

NOTES:

1. LEFT SLIDE AS SHOWN, RIGHT SLIDE OPPOSITE.
2. SLIDE LOCKS IN OPEN POSITION ONLY.
3. SLIDE FEATURES QUICK DISCONNECT OF CHASSIS SECTION.
4. CABINET SECTION OR CHASSIS SECTION MAY BE PURCHASED SEPARATELY AND ARE INTERCHANGEABLE. CONTACT JONATHAN FOR ORDERING INSTRUCTIONS.
5. FOR "EIA/RETMA" BRACKETS, SEE BRACKETRY SECTION.
6. AMOUNT OF ROLLERS TO BE DETERMINED BY JONATHAN ENGINEERED SOLUTIONS

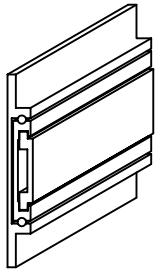

ISOMETRIC REPRESENTATION

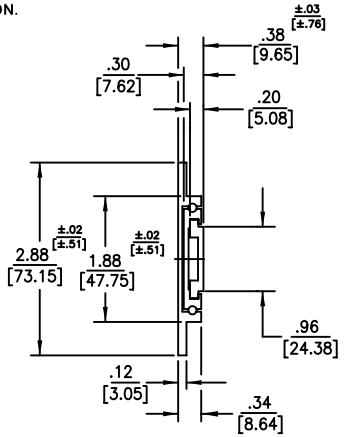

END VIEW

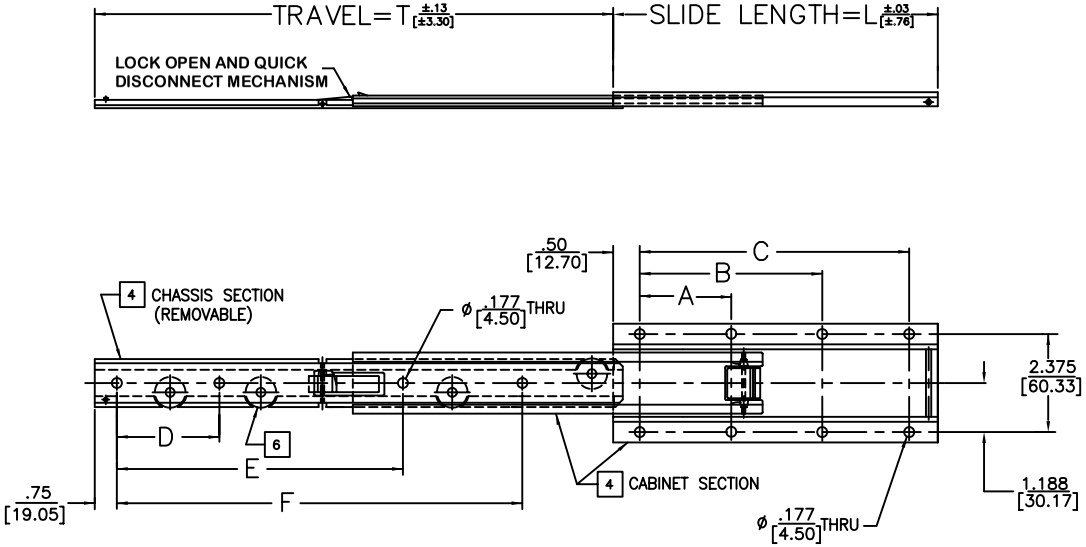

PART NO.	SLIDE LENGTH	SLIDE TRAVEL	MOUNTING HOLE PATTERN						LOAD RATING
SERIES – LENGTH	DIM. L	DIM. T	OUTER MEMBER A	B	C	CHASSIS SECTION D	E	F	PER PAIR
120QD–10	10 / 254	9 / 228.6	3 / 76.2	6 / 152.4	9 / 228.6	2 / 50.8	5 / 127	7 / 177.8	100 LBS / 45 KG
120QD–12	12 / 304.8	11 / 279.4	4 / 101.6	7 / 177.8	11 / 279.4	2 / 50.8	7 / 177.8	9 / 228.6	100 LBS / 45 KG
120QD–14	14 / 355.6	13 / 330.2	4 / 101.6	9 / 228.6	13 / 330.2	3 / 76.2	9 / 228.6	11 / 279.4	100 LBS / 45 KG
120QD–16	16 / 406.4	15 / 381	5 / 127	10 / 254	15 / 381	3 / 76.2	10 / 254	13 / 330.2	100 LBS / 45 KG
120QD–18	18 / 457.2	17 / 431.8	6 / 152.4	11 / 279.4	17 / 431.8	5 / 127	10 / 254	15 / 381	95 LBS / 43 KG
120QD–20	20 / 508	19 / 482.6	6 / 152.4	13 / 330.2	19 / 482.6	5 / 127	12 / 304.8	17 / 431.8	88 LBS / 39 KG
120QD–22	22 / 558.8	21 / 533.4	7 / 177.8	14 / 355.6	21 / 533.4	6 / 152.4	13 / 330.2	19 / 482.6	84 LBS / 38 KG
120QD–24	24 / 609.6	23 / 584.2	8 / 203.2	15 / 381	23 / 584.2	7 / 177.8	14 / 355.6	21 / 533.4	80 LBS / 36 KG
120QD–26	26 / 660.4	25 / 635	8 / 203.2	17 / 431.8	25 / 635	7 / 177.8	16 / 406.4	23 / 584.2	77 LBS / 34 KG
120QD–28	28 / 711.2	27 / 685.8	9 / 228.6	18 / 457.2	27 / 685.8	8 / 203.2	17 / 431.8	25 / 635	74 LBS / 33 KG
120QD–30	30 / 762	29 / 736.6	10 / 254	19 / 482.6	29 / 736.6	9 / 228.6	18 / 457.2	27 / 685.8	70 LBS / 32 KG

Irvine Technology Center
410 Exchange, Suite 200
Irvine, CA 92602
Tel: (714) 665–4400
Website: www.JonathanEngr.com
Engineering • Production • Integration/Subassembly • Logistics
United States • Mexico • China • Taiwan

DIMENSIONS SHOWN AS: IN. / [MM]

TOLERANCE UNLESS OTHERWISE NOTED

.XX / .X	±.010 [±.3]
.XXX / .XX	±.005 [±.13]
ANGLES	±1°

SERIES: 120QD

DATE: 1/11

DESCRIPTION:

ALUMINUM
SERIES 120QD
LOAD RATING: 70–100 LBS./ 32–45 KG.

COPYRIGHT © 2011 JONATHAN ENGINEERED SOLUTIONS

NOTES:

1. LEFT SLIDE AS SHOWN, RIGHT SLIDE OPPOSITE.
2. SLIDE LOCKS IN OPEN POSITION ONLY.
3. FOR "EIA/RETMA" BRACKETS. SEE BRACKETRY SECTION.
4. SLIDE FEATURES QUICK DISCONNECT OF CHASSIS SECTION AND 90° UP AND DOWN PIVOT.

[5] CABINET SECTION OR CHASSIS SECTION MAY BE PURCHASED SEPARATELY AND ARE INTERCHANGEABLE. CONTACT JONATHAN FOR ORDERING INSTRUCTIONS.

[6] AMOUNT OF ROLLERS TO BE DETERMINED BY JONATHAN ENGINEERED SOLUTIONS

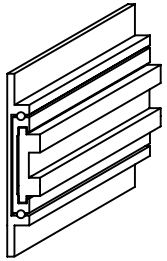

ISOMETRIC REPRESENTATION

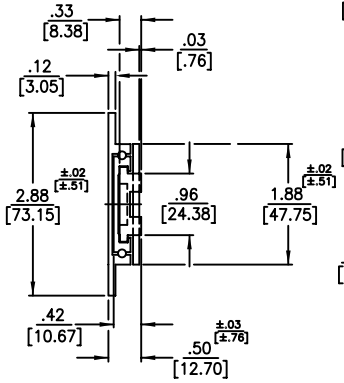

END VIEW

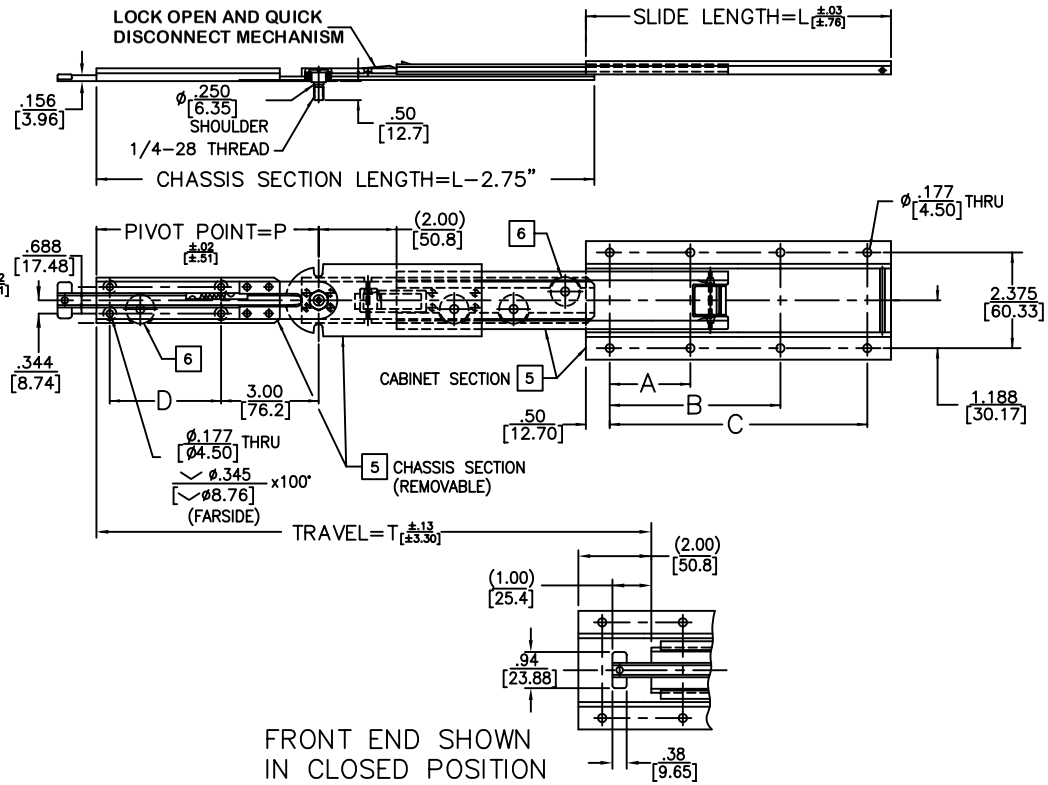

FRONT END SHOWN IN CLOSED POSITION

PART NO.	SLIDE LENGTH	SLIDE TRAVEL	PIVOT POINT	MOUNTING HOLE PATTERN				LOAD RATING
SERIES — LENGTH	DIM. L	DIM. T	DIM. P	OUTER MEMBER A	B	C	PIVOT PLATE D	PER PAIR
120QDP-14	14 / 355.6	15 / 381	5 / 127	4 / 101.6	9 / 228.6	13 / 330.2	1.25 / 31.75	100 LBS / 45 KG
120QDP-16	16 / 406.4	17 / 431.8	6 / 152.4	5 / 127	10 / 254	15 / 381	2.25 / 57.15	100 LBS / 45 KG
120QDP-18	18 / 457.2	19 / 482.6	7 / 177.8	6 / 152.4	11 / 279.4	17 / 431.8	3.25 / 82.55	95 LBS / 43 KG
120QDP-20	20 / 508	21 / 533.4	8 / 203.2	6 / 152.4	13 / 330.2	19 / 482.6	4.25 / 107.9	88 LBS / 39 KG
120QDP-22	22 / 558.8	23 / 584.2	9 / 228.6	7 / 177.8	14 / 355.6	21 / 533.4	5.25 / 133.4	84 LBS / 38 KG
120QDP-24	24 / 609.6	25 / 635	10 / 254	8 / 203.2	15 / 381	23 / 584.2	6.25 / 158.8	80 LBS / 36 KG
120QDP-26	26 / 660.4	27 / 685.8	11 / 279.4	8 / 203.2	17 / 431.8	25 / 635	7.25 / 184.2	77 LBS / 34 KG
120QDP-28	28 / 711.2	29 / 736.6	12 / 304.8	9 / 228.6	18 / 457.2	27 / 685.8	8.25 / 209.6	74 LBS / 33 KG
120QDP-30	30 / 762	31 / 787.4	13 / 330.2	10 / 254	19 / 482.6	29 / 736.6	9.25 / 234.9	70 LBS / 32 KG

JONATHAN® Engineered Solutions

Irvine Technology Center
410 Exchange, Suite 200
Irvine, CA 92602
Tel: (714) 665-4400
Website: www.JonathanEngr.com
Engineering • Production • Integration/Subassembly • Logistics
United States • Mexico • China • Taiwan

DIMENSIONS SHOWN AS: IN. [MM] TOLERANCE UNLESS OTHERWISE NOTED	
.XX / .X	±.010 [±.3]
.XXX / .XX	±.005 [±.13]
ANGLES	±1°

SERIES: 120QDP

DATE: 1/11

DESCRIPTION:

ALUMINUM
SERIES 120QDP
LOAD RATING: 70-100 LBS./ 32-45 KG.

COPYRIGHT © 2011 JONATHAN ENGINEERED SOLUTIONS

NOTES:

1. SLIDE IS SYMMETRICAL. MAY BE USED AS LEFT OR RIGHT HAND SLIDE.
2. CABINET SECTION AND CHASSIS SECTION MAY BE PURCHASED SEPARATELY AND ARE INTERCHANGEABLE CONTACT JONATHAN FOR ORDERING INSTRUCTIONS.
3. SLIDE FEATURES QUICK DISCONNECT OF CHASSIS SECTION.
4. FOR "EIA/RETMA" BRACKETS, SEE BRACKETRY SECTION.
5. USE #6 F.H.M.S. FOR MOUNTING THRU THE SLIDE MEMBERS.
6. **ORDERING INFORMATION**

TO ORDER SLIDES WITH BRACKET KIT BK-18 OR BK-19 PRE-ASSEMBLED TO SLIDES:

RECESSED BRACKETS BK-18
ORDER: 125-(LENGTH)-2
EXAMPLE: 125-12-2

NON-RECESSED BRACKETS BK-19
ORDER: 125-(LENGTH)-3
EXAMPLE: 125-12-3

SEE BRACKETRY SECTION FOR BK-18 AND BK-19

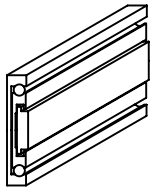

ISOMETRIC REPRESENTATION

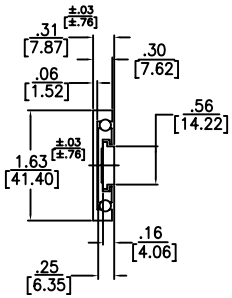

END VIEW

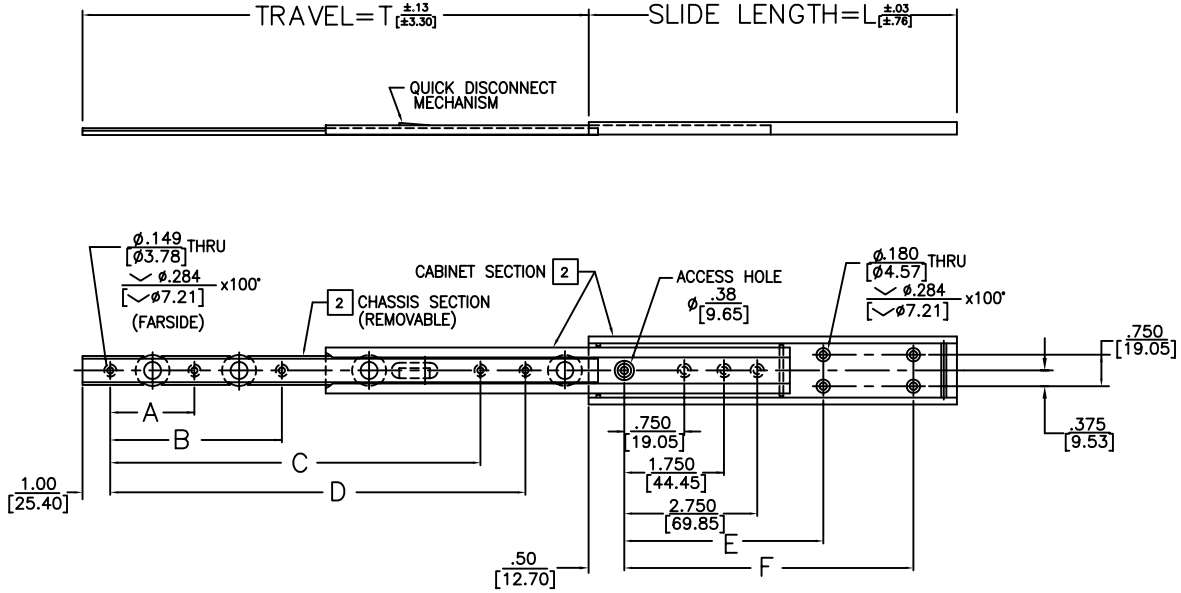

PART NO.	SLIDE LENGTH	SLIDE TRAVEL	MOUNTING HOLE PATTERN						LOAD RATING
SERIES – LENGTH	DIM. L	DIM. T	CHASSIS SECTION A	B	C	D	CABINET SECTION E	F	PER PAIR
125–10	10 / 254	9 / 228.6		2 / 50.8		6.56 / 166.6	5.75 / 146.1	8.75 / 222.3	98 LBS / 44 KG
125–12	12 / 304.8	11 / 279.4	1 / 25.4	3 / 76.2		8 / 203.2	6.75 / 171.5	10.75 / 273.1	94 LBS / 43 KG
125–14	14 / 355.6	13 / 330.2	2 / 50.8	4 / 101.6		10 / 254	7.75 / 196.9	12.75 / 323.9	90 LBS / 41 KG
125–16	16 / 406.4	15 / 381	3 / 76.2	5 / 127	10 / 254	12 / 304.8	8.75 / 222.3	14.75 / 374.7	87 LBS / 39 KG
125–18	18 / 457.2	17 / 431.8	4 / 101.6	6 / 152.4	11 / 279.4	14 / 355.6	9.75 / 247.7	16.75 / 425.5	85 LBS / 39 KG
125–20	20 / 508	19 / 482.6	4 / 101.6	7 / 177.8	12 / 304.8	16 / 406.4	10.75 / 273.1	18.75 / 476.3	78 LBS / 35 KG
125–22	22 / 558.8	21 / 533.4	5 / 127	8 / 203.2	13 / 330.2	18 / 457.2	11.75 / 298.5	20.75 / 527.1	71 LBS / 32 KG
125–24	24 / 609.6	23 / 584.2	6 / 152.4	9 / 228.6	14 / 355.6	20 / 508	12.75 / 323.9	22.75 / 577.9	67 LBS / 30 KG

JONATHAN® Engineered Solutions
Irvine Technology Center
410 Exchange, Suite 200
Irvine, CA 92602
Tel: (714) 665–4400
Website: www.JonathanEngr.com
Engineering • Production • Integration/Subassembly • Logistics
United States • Mexico • China • Taiwan

DIMENSIONS SHOWN AS: IN. / [MM]

TOLERANCE UNLESS OTHERWISE NOTED

.XX / .X	±.010 / [±.3]
.XXX / .XX	±.005 / [±.13]
ANGLES	±1°

SERIES: 125

DATE: 1/11

DESCRIPTION:

ALUMINUM
SERIES 125
LOAD RATING: 67–98 LBS./ 30–44 KG.

COPYRIGHT © 2011 JONATHAN ENGINEERED SOLUTIONS

NOTES:

1. SLIDE IS SYMMETRICAL. MAY BE USED AS LEFT OR RIGHT HAND SLIDE.
2. SLIDE LOCKS IN OPEN POSITION ONLY.
3. SLIDE FEATURES QUICK DISCONNECT OF CHASSIS SECTION.
4. CABINET SECTION AND CHASSIS SECTION MAY BE PURCHASED SEPARATELY AND ARE INTERCHANGEABLE. CONTACT JONATHAN FOR ORDERING INSTRUCTIONS
5. FOR "EIA/RETMA" BRACKETS, SEE BRACKETRY SECTION.
6. USE #6 F.H.M.S. FOR MOUNTING THRU THE SLIDE MEMBERS.
7. ORDERING INFORMATION

TO ORDER SLIDES WITH BRACKET KIT BK-18 OR BK-19 PRE-ASSEMBLED TO SLIDES:

RECESSED BRACKETS BK-18
ORDER: 125L-(LENGTH)-2
EXAMPLE: 125L-12-2

NON-RECESSED BRACKETS BK-19
ORDER: 125L-(LENGTH)-3
EXAMPLE: 125L-12-3

SEE BRACKETRY SECTION FOR BK-18 AND BK-19

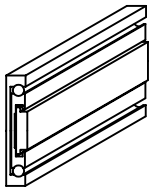

ISOMETRIC REPRESENTATION

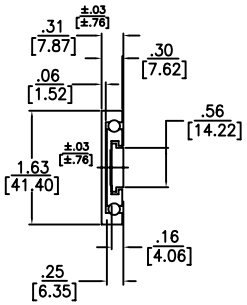

END VIEW

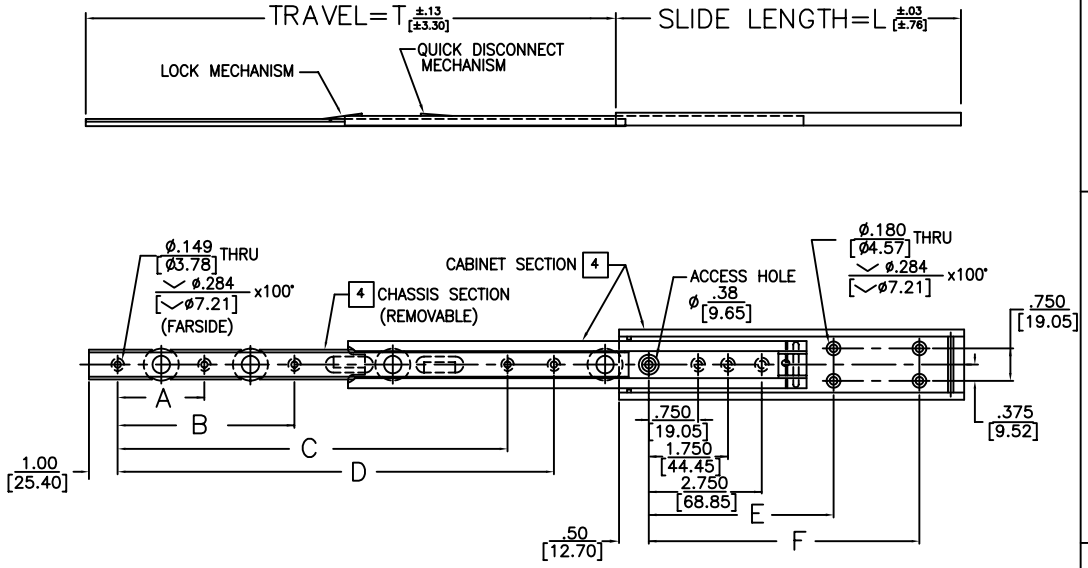

PART NO.	SLIDE LENGTH	SLIDE TRAVEL	MOUNTING HOLE PATTERN						LOAD RATING
SERIES – LENGTH	DIM. L	DIM. T	CHASSIS SECTION A	B	C	D	OUTER CHANNEL E	F	PER PAIR
125L–10	10 / 254	9 / 228.6		2 / 50.8		6.56 / 166.6	5.75 / 146.1	8.75 / 222.3	98 LBS / 44 KG
125L–12	12 / 304.8	11 / 279.4	1 / 25.4	3 / 76.2		8 / 203.2	6.75 / 171.5	10.75 / 273.1	94 LBS / 43 KG
125L–14	14 / 355.6	13 / 330.2	2 / 50.8	4 / 101.6		10 / 254	7.75 / 196.9	12.75 / 323.9	90 LBS / 41 KG
125L–16	16 / 406.4	15 / 381	3 / 76.2	5 / 127	10 / 254	12 / 304.8	8.75 / 222.3	14.75 / 374.7	87 LBS / 39 KG
125L–18	18 / 457.2	17 / 431.8	4 / 101.6	6 / 152.4	11 / 279.4	14 / 355.6	9.75 / 247.7	16.75 / 425.5	85 LBS / 39 KG
125L–20	20 / 508	19 / 482.6	4 / 101.6	7 / 177.8	12 / 304.8	16 / 406.4	10.75 / 273.1	18.75 / 476.3	78 LBS / 35 KG
125L–22	22 / 558.8	21 / 533.4	5 / 127	8 / 203.2	13 / 330.2	18 / 457.2	11.75 / 298.5	20.75 / 527.1	71 LBS / 32 KG
125L–24	24 / 609.6	23 / 584.2	6 / 152.4	9 / 228.6	14 / 355.6	20 / 508	12.75 / 323.9	22.75 / 577.9	67 LBS / 30 KG

JONATHAN® Engineered Solutions

Irvine Technology Center
410 Exchange, Suite 200
Irvine, CA 92602
Tel: (714) 665–4400
Website: www.JonathanEngr.com
Engineering • Production • Integration/Subassembly • Logistics
United States • Mexico • China • Taiwan

DIMENSIONS SHOWN AS: IN. [MM]	TOLERANCE UNLESS OTHERWISE NOTED
.XX / .X	±.010 [±.3]
.XXX / .XX	±.005 [±.13]
ANGLES	±1°

SERIES: 125L

DATE: 1/11

DESCRIPTION:

ALUMINUM
SERIES 125L
LOAD RATING: 67–98 LBS./ 30–44 KG.

COPYRIGHT © 2011 JONATHAN ENGINEERED SOLUTIONS

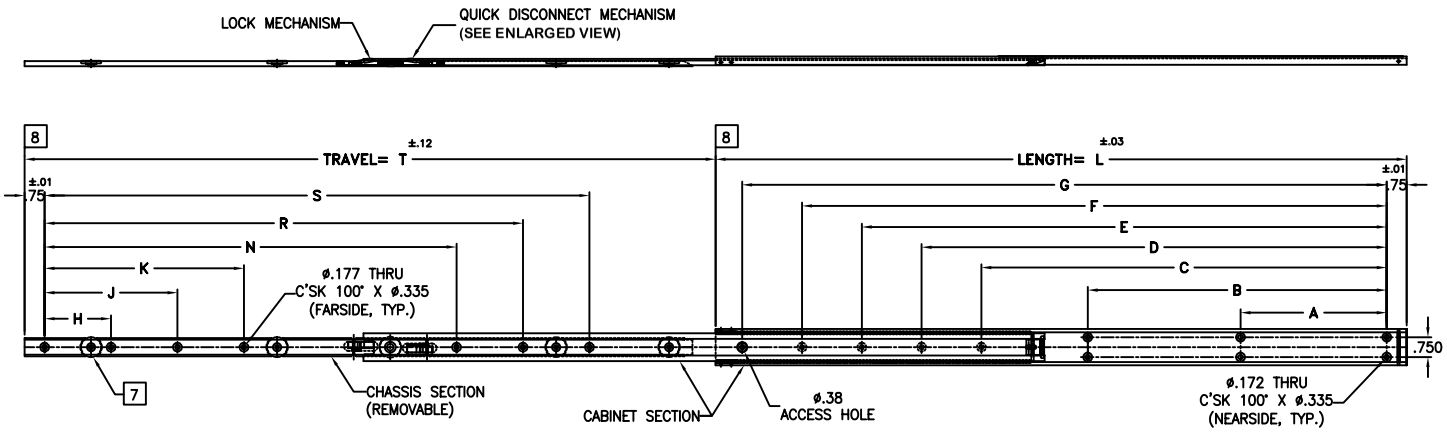

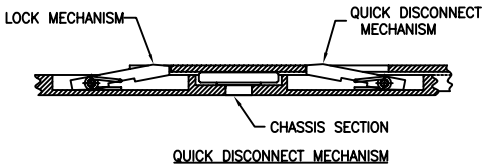

QUICK DISCONNECT MECHANISM

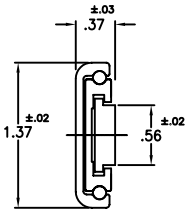

END VIEW

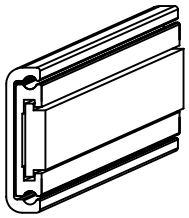

ISOMETRIC REPRESENTATION

8. THESE SURFACES ALIGN WHEN SLIDE IS IN THE CLOSED POSITION.
7. AMOUNT OF ROLLERS TO BE DETERMINED BY JONATHAN ENGINEERING SOLUTIONS.
6. CABINET SECTION OR CHASSIS SECTION MAY BE PURCHASED SEPARATELY AND ARE INTERCHANGEABLE.
5. USE #8 100 DEG. FLAT HEAD MACHINE SCREW FOR MOUNTING THRU SLIDE MEMBERS.
4. SLIDE LOCKS IN OPEN POSITION AND IS PROVIDED WITH QUICK DISCONNECT OF CHASSIS SECTION.
3. SLIDE IS SYMMETRICAL, MAY BE USED AS LEFT OR RIGH HAND SLIDE.
2. FINISH: CHANNELS ARE ANODIZED PER MIL–A–8625 TYPE II, CLASS 1. CRES PARTS PASSIVATED PER MIL–S–5002.
1. MATERIAL: CHANNELS ARE FABRICATED FROM HIGH STRENGTH ALUMINUM ALLOYS. COMPONENT PARTS ARE 302 CRES. PER QQ–S–763 OR 303 CRES PER ASTM A582. BALLS ARE 440 CRES.

PART NO.	SLIDE LENGTH	SLIDE TRAVEL	MOUNTING HOLE PATTERN													LOAD RATING	SLIDE WEIGHT (LBS.)
			CABINET SECTION							CHASSIS SECTION							
SERIES LENGTH	DIM. L	DIM. T	A	B	C	D	E	F	G	H	J	K	N	R	S	PER PAIR	
128QD–10	10	10	4.000	–	6.000	–	–	–	8.250	3.250	–	–	–	–	6.500	108 LBS	.322
128QD–11	11	11	4.000	–	7.000	–	–	–	9.250	2.500	–	–	–	–	8.500	108 LBS	.354
128QD–12	12	12	4.000	–	8.000	–	–	–	10.250	2.500	–	–	–	–	8.500	108 LBS	.386
128QD–13	13	13	5.500	–	9.000	–	–	–	11.250	2.500	–	–	–	–	8.500	104 LBS	.418
128QD–14	14	14	5.500	–	10.000	–	–	–	12.250	2.500	–	5.000	–	–	11.500	101 LBS	.450
128QD–15	15	15	5.500	–	11.000	–	–	–	13.250	2.500	–	5.000	–	–	11.500	101 LBS	.482
128QD–16	16	16	5.500	–	9.750	12.000	–	–	14.250	2.500	–	5.000	–	–	11.500	98 LBS	.514
128QD–17	17	17	5.500	–	8.500	10.750	13.000	–	15.250	2.500	–	5.000	–	–	11.500	98 LBS	.546
128QD–18	18	18	5.500	–	9.500	11.750	14.000	–	16.250	2.500	–	5.000	11.000	–	13.500	94 LBS	.579
128QD–19	19	19	5.500	–	10.500	12.750	15.000	–	17.250	2.500	–	5.000	11.000	–	13.500	94 LBS	.611
128QD–20	20	20	5.500	–	11.500	13.750	16.000	–	18.250	2.500	–	5.000	8.500	–	13.500	90 LBS	.643
128QD–21	21	21	5.500	–	12.500	14.750	17.000	–	19.250	2.500	5.000	7.500	14.000	–	16.500	90 LBS	.675
128QD–22	22	22	5.500	–	13.500	15.750	18.000	–	20.250	2.500	5.000	7.500	14.000	–	16.500	87 LBS	.707
128QD–23	23	23	5.500	–	12.250	14.500	16.750	19.000	21.250	2.500	5.000	7.500	13.500	16.000	18.500	87 LBS	.740
128QD–24	24	24	5.500	–	13.250	15.500	17.750	20.000	22.250	2.500	5.000	7.500	13.500	16.000	18.500	85 LBS	.774
128QD–25	25	25	5.500	11.250	14.250	16.500	18.750	21.000	23.250	2.500	5.000	7.500	15.500	18.000	20.500	80 LBS	.805
128QD–26	26	26	5.500	11.250	15.250	17.500	19.750	22.000	24.250	2.500	5.000	7.500	15.500	18.000	20.500	80 LBS	.836

Irvine Technology Center
410 Exchange, Suite 200
Irvine, CA 92602
Tel: (714) 665–4400
Website: www.JonathanEngr.com
Engineering • Production • Integration/Subassembly • Logistics
United States • Mexico • China • Taiwan

DIMENSIONS SHOWN AS: IN. [MM]	TOLERANCE UNLESS OTHERWISE NOTED
.XX / .X	±.010 [±.3]
.XXX / .XX	±.005 [±.13]
ANGLES	±1°

SERIES
128QD

DATE:
1/11

DESCRIPTION:
ALUMINUM
SERIES 128QD
LOAD RATING: 80–108 LBS.

COPYRIGHT © 2011 JONATHAN ENGINEERED SOLUTIONS

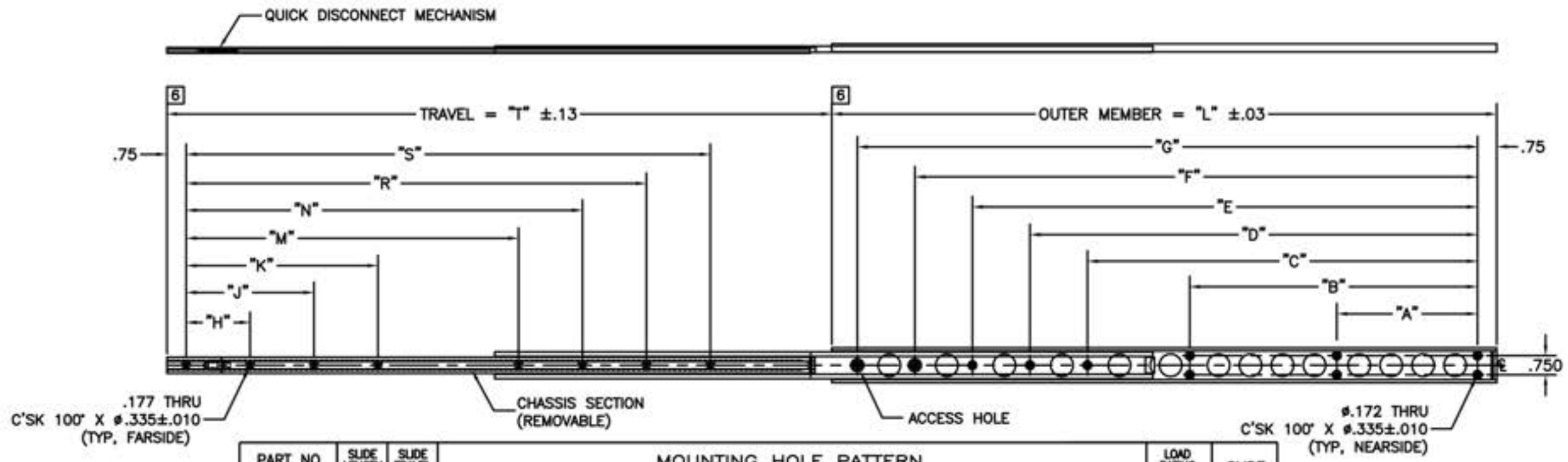

PART NO.	SLIDE LENGTH	SLIDE TRAVEL	MOUNTING HOLE PATTERN															LOAD RATING	SLIDE WEIGHT (LBS.)
SERIES – LENGTH	DIM. L	DIM. T	CHASSIS SECTION H	J	K	M	N	R	S	CABINET SECTION A	B	C	D	E	F	G		PER PAIR	
128V–6	6	6							3.500			2.000				4.250		98 LBS	.193
128V–7	7	7	2.500						4.500			3.000				5.250		98 LBS	.225
128V–8	8	8	2.750						5.500	3.000		4.000				6.250		101 LBS	.257
128V–9	9	9	3.250						6.500	3.000		5.000				7.250		101 LBS	.290
128V–10	10	10	3.250						6.500	4.000		6.000				8.250		108 LBS	.322
128V–11	11	11	2.500			6.000			8.500	4.000		7.000				9.250		108 LBS	.354
128V–12	12	12	2.500			6.000			8.500	4.000		8.000				10.250		104 LBS	.386
128V–13	13	13	2.500			6.000			8.500	5.500		9.000				11.250		104 LBS	.418
128V–14	14	14	2.500		5.000	9.000			11.500	5.500		10.000				12.250		101 LBS	.450
128V–15	15	15	2.500		5.000	9.000			11.500	5.500		11.000				13.250		101 LBS	.482
128V–16	16	16	2.500		5.000	9.000			11.500	5.500		7.500	9.750	12.000		14.250		98 LBS	.514
128V–17	17	17	2.500		5.000	9.000			11.500	5.500		8.500	10.750	13.000		15.250		98 LBS	.547
128V–18	18	18	2.500		5.000	8.500	11.000		13.500	5.500		9.500	11.750	14.000		16.250		94 LBS	.579
128V–19	19	19	2.500		5.000	8.500	11.000		13.500	5.500		10.500	12.750	15.000		17.250		94 LBS	.610
128V–20	20	20	2.500		5.000	8.500	11.000		13.500	5.500		11.500	13.750	16.000		18.250		90 LBS	.643
128V–21	21	21	2.500	5.000	7.500	11.500	14.000		16.500	5.500		12.500	14.750	17.000		19.250		90 LBS	.675
128V–22	22	22	2.500	5.000	7.500	11.500	14.000		16.500	5.500		13.500	15.750	18.000		20.250		87 LBS	.707
128V–23	23	23	2.500	5.000	7.500	11.000	13.500	16.000	18.500	5.500		12.250	14.500	16.750	19.000	21.250		87 LBS	.741
128V–24	24	24	2.500	5.000	7.500	11.000	13.500	16.000	18.500	5.500		13.250	15.500	17.750	20.000	22.250		85 LBS	.774
128V–25	25	25	2.500	5.000	7.500	13.000	15.500	18.000	20.500	5.500	11.250	14.250	16.500	18.750	21.000	23.250		85 LBS	.810
128V–26	26	26	2.500	5.000	7.500	13.000	15.500	18.000	20.500	5.500	11.250	15.250	17.500	19.750	22.000	24.250		80 LBS	.836

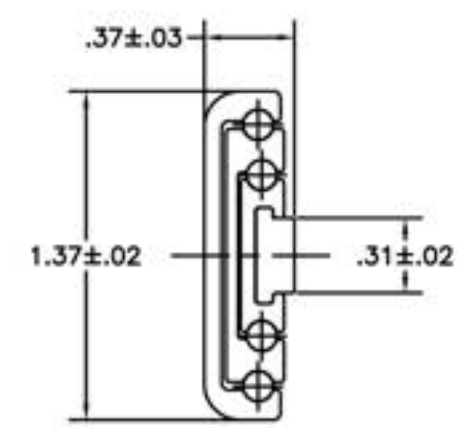

END VIEW

6 THESE SURFACES ALIGN WHEN SLIDE IS IN THE CLOSED POSITION.

5. USE #8 X 100° FLAT HEAD MACHINE SCREWS FOR MOUNTING THRU SLIDE MEMBERS.
4. SLIDE FEATURES QUICK DISCONNECT OF CHASSIS SECTION.
3. SLIDE IS SYMMETRICAL. MAY BE USED AS LEFT OR RIGHT HAND SLIDE.
2. FINISH: CHANNELS ARE ANODIZED PER MIL–A–8625 TYPE II, CLASS 1 CRES PARTS PASSIVATED PER SAE–AMS–QQ–P–35.
1. MATERIAL: SLIDE CHANNELS ARE FABRICATED FROM HIGH STRENGTH ALUMINUM ALLOYS WITH TENSILE STRENGTH OF 35,000 PSI MIN. (PER ASTM B221). COMPONENT PARTS ARE 302 OR 303 CRES AND HIGH STRENGTH ALUMINUM. BALL BEARINGS ARE 440 CRES.

JONATHAN® Engineered Solutions

Irvine Technology Center
410 Exchange, Suite 200
Irvine, CA 92602
Tel. (714) 665-4400
Fax: (714) 368-7002
Website: www.jonathanengr.com
Engineer - Production - Integration/ Subassembly - Logistics
United States - Mexico - China - Taiwan

TOLERANCES UNLESS OTHERWISE NOTED				PART NUMBER :	DESCRIPTION :
.XX	.XXX	ANGLE	HOLES	128V	ALUMINUM SERIES 128 LOAD RATING: 80-108 LBS
± .010	± .005	± 1°	± .005	DATE : 1/11	
SHEET 1 OF 1					

COPYRIGHT © 2011 JONATHAN ENGINEERED SOLUTIONS

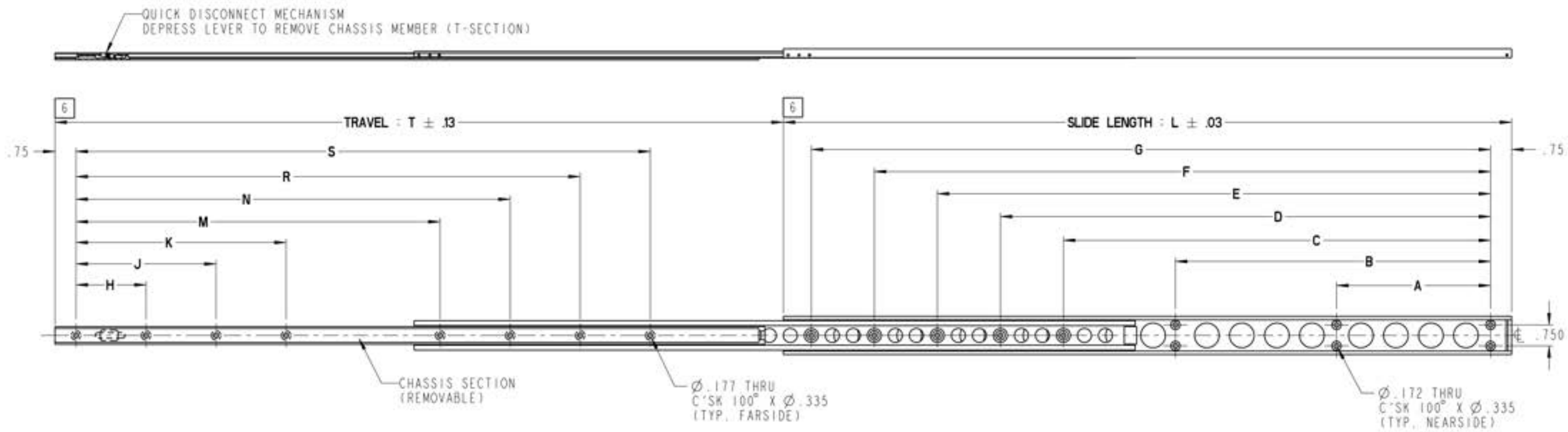

3. SLIDE IS SYMMETRICAL, MAY BE USED AS LEFT OR RIGHT HAND SLIDE.

2. FINISH: CHANNELS ARE ANODIZED PER MIL-A-8625, TYPE II, CLASS I. CRES PARTS PASSIVATED PER SAE-AMS-QQ-P-35.

1. MATERIAL: CHANNELS ARE FABRICATED FROM HIGH STRENGTH ALUMINUM ALLOYS WITH TENSILE STRENGTH OF 35,000 PSI MIN. (PER ASTM B221). COMPONENT PARTS ARE 302 OR 303 CRES AND HIGH STRENGTH ALUMINUM. BALL BEARINGS ARE 440 CRES.

[6] THESE SURFACES ALIGN WHEN SLIDE IS IN CLOSED POSITION.

5. USE #8 X 100° FLAT HEAD MACHINE SCREWS FOR MOUNTING THRU SLIDE MEMBERS.

4. SLIDE FEATURES QUICK DISCONNECT OF CHASSIS SECTION.

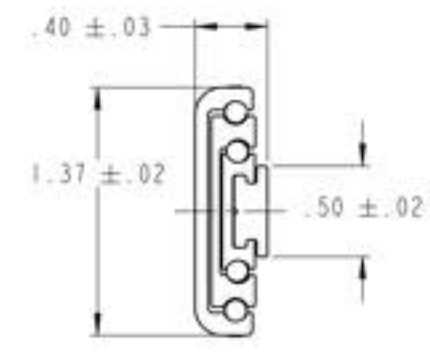

END VIEW

SERIES - LENGTH	SLIDE LENGTH	SLIDE TRAVEL	MOUNTING HOLE PATTERN														LOAD RATING	SLIDE WEIGHT
			CABINET SECTION							CHASSIS SECTION								
PART NO.	L	T	A	B	C	D	E	F	G	H	J	K	M	N	R	S	PER PAIR	
129T-6	6.00	6.00	-	-	2.000	-	-	-	4.250	-	-	-	-	-	-	3.500	98 LBS	.203 LBS
129T-7	7.00	7.00	-	-	3.000	-	-	-	5.250	2.500	-	-	-	-	-	4.500	98 LBS	.244 LBS
129T-8	8.00	8.00	3.000	-	4.000	-	-	-	6.250	2.750	-	-	-	-	-	5.500	101 LBS	.280 LBS
129T-9	9.00	9.00	3.000	-	5.000	-	-	-	7.250	3.250	-	-	-	-	-	6.500	101 LBS	.320 LBS
129T-10	10.00	10.00	4.000	-	6.000	-	-	-	8.250	3.250	-	-	-	-	-	6.500	108 LBS	.356 LBS
129T-11	11.00	11.00	4.000	-	7.000	-	-	-	9.250	2.500	-	-	6.000	-	-	8.500	108 LBS	.397 LBS
129T-12	12.00	12.00	4.000	-	8.000	-	-	-	10.250	2.500	-	-	6.000	-	-	8.500	104 LBS	.431 LBS
129T-13	13.00	13.00	5.500	-	9.000	-	-	-	11.250	2.500	-	-	6.000	-	-	8.500	104 LBS	.470 LBS
129T-14	14.00	14.00	5.500	-	10.000	-	-	-	12.250	2.500	-	5.000	9.000	-	-	11.500	101 LBS	.507 LBS
129T-15	15.00	15.00	5.500	-	11.000	-	-	-	13.250	2.500	-	5.000	9.000	-	-	11.500	101 LBS	.541 LBS
129T-16	16.00	16.00	5.500	-	7.500	9.750	12.000	-	14.250	2.500	-	5.000	9.000	-	-	11.500	98 LBS	.583 LBS
129T-17	17.00	17.00	5.500	-	8.500	10.750	13.000	-	15.250	2.500	-	5.000	9.000	-	-	11.500	98 LBS	.621 LBS
129T-18	18.00	18.00	5.500	-	9.500	11.750	14.000	-	16.250	2.500	-	5.000	8.500	11.000	-	13.500	94 LBS	.659 LBS
129T-19	19.00	19.00	5.500	-	10.500	12.750	15.000	-	17.250	2.500	-	5.000	8.500	11.000	-	13.500	94 LBS	.696 LBS
129T-20	20.00	20.00	5.500	-	11.500	13.750	16.000	-	18.250	2.500	-	5.000	8.500	11.000	-	13.500	90 LBS	.735 LBS
129T-21	21.00	21.00	5.500	-	12.500	14.750	17.000	-	19.250	2.500	5.000	7.500	11.500	14.000	-	16.500	90 LBS	.768 LBS
129T-22	22.00	22.00	5.500	-	13.500	15.750	18.000	-	20.250	2.500	5.000	7.500	11.500	14.000	-	16.500	87 LBS	.810 LBS
129T-23	23.00	23.00	5.500	-	12.250	14.500	16.750	19.000	21.250	2.500	5.000	7.500	11.000	13.500	16.000	18.500	87 LBS	.844 LBS
129T-24	24.00	24.00	5.500	-	13.250	15.500	17.750	20.000	22.250	2.500	5.000	7.500	11.000	13.500	16.000	18.500	85 LBS	.886 LBS
129T-25	25.00	25.00	5.500	11.250	14.250	16.500	18.750	21.000	23.250	2.500	5.000	7.500	13.000	15.500	18.000	20.500	85 LBS	.920 LBS
129T-26	26.00	26.00	5.500	11.250	15.250	17.500	19.750	22.000	24.250	2.500	5.000	7.500	13.000	15.500	18.000	20.500	80 LBS	.962 LBS

JONATHAN® Engineered Solutions

Irvine Technology Center
410 Exchange, Suite 200
Irvine, CA 92602
Tel. (714) 665-4400
Fax: (714) 368-7002
Website: www.jonathanengr.com
Engineer - Production - Integration/ Subassembly - Logistics
United States - Mexico - China - Taiwan

TOLERANCES UNLESS OTHERWISE NOTED			
.XX	.XXX	ANGLES	HOLES
± .01	± .005	± 1°	± .005

SHEET 1 OF 1

PART NUMBER : 129T

DATE : 1/11

DESCRIPTION :

ALUMINUM SERIES 129T LOAD RATING : 80-108 LBS

COPYRIGHT © 2011 JONATHAN ENGINEERED SOLUTIONS

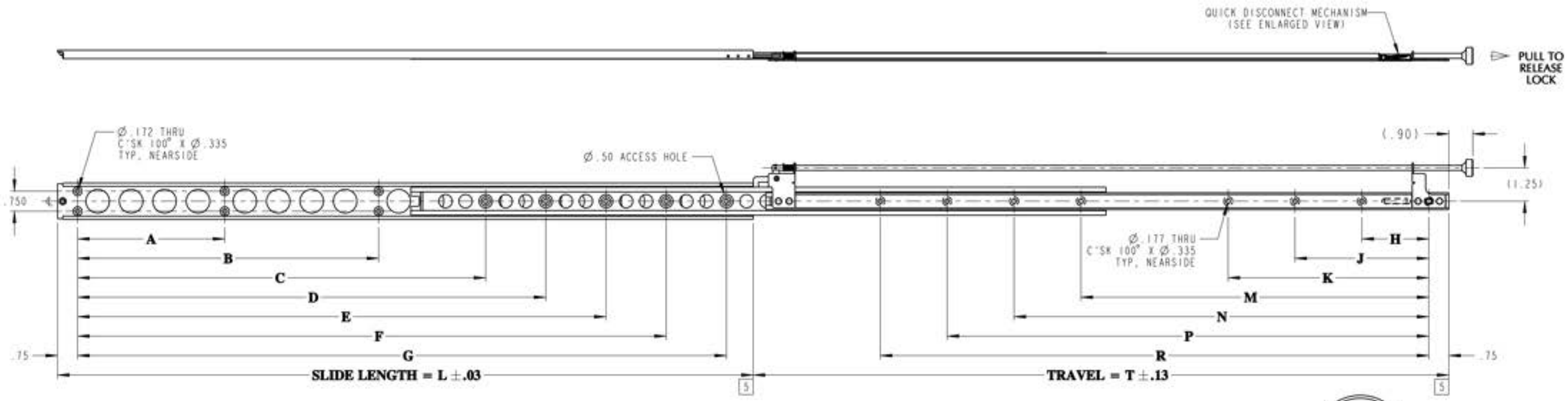

6. NUMBER OF LIGHTENING HOLES ON SLIDE TO BE DETERMINED BY JONATHAN ENGINEERED SOLUTIONS AND WILL VARY WITH SLIDE LENGTH.

5 THESE SURFACES ALIGN WHEN SLIDE IS IN CLOSED POSITION.

4. USE #8 X 100° FLAT HEAD MACHINE SCREWS FOR MOUNTING THRU SLIDE MEMBERS.

3. SLIDE IS PROVIDED WITH LOCK OPEN & CLOSED MECHANISM, AND QUICK DISCONNECT OF CHASSIS SECTION.

2. FINISH: CHANNELS ARE ANODIZED PER MIL-A-8625, TYPE II, CLASS I. CRES PARTS PASSIVATED PER SAE-AMS-QQ-P-35.

1. MATERIAL: CHANNELS ARE FABRICATED FROM HIGH STRENGTH ALUMINUM ALLOYS WITH TENSILE STRENGTH OF 35,000 PSI MIN. (PER ASTM B221). COMPONENT PARTS ARE 302 OR 303 CRES AND HIGH STRENGTH ALUMINUM. BALL BEARINGS ARE 440 CRES.

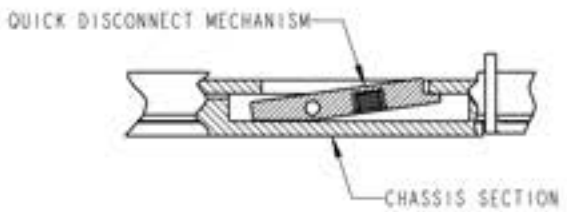

QUICK DISCONNECT MECHANISM

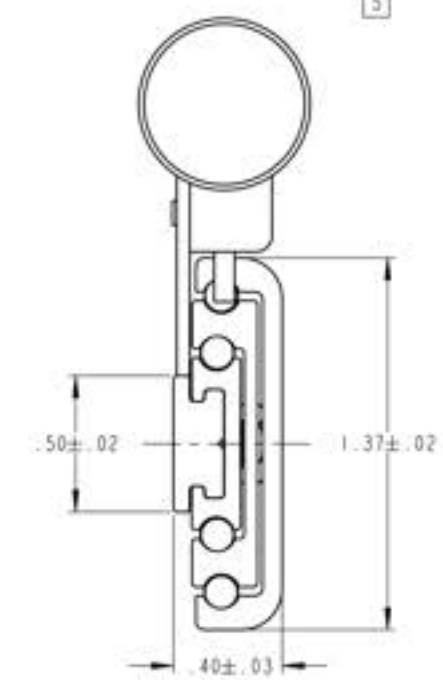

SERIES - LENGTH	SLIDE LENGTH	SLIDE TRAVEL	MOUNTING HOLE PATTERN														LOAD RATING	SLIDE WEIGHT
			CABINET SECTION							CHASSIS SECTION								
PART NO.	L	T	A	B	C	D	E	F	G	H	J	K	M	N	P	R	PER PAIR	
129HL-6	6.00	6.00	-	-	2.000	-	-	-	4.250	-	-	-	-	-	-	3.500	98 LBS	.276 LBS
129HL-7	7.00	7.00	-	-	3.000	-	-	-	5.250	2.500	-	-	-	-	-	4.500	98 LBS	.314 LBS
129HL-8	8.00	8.00	3.000	-	4.000	-	-	-	6.250	2.750	-	-	-	-	-	5.500	101 LBS	.356 LBS
129HL-9	9.00	9.00	3.000	-	5.000	-	-	-	7.250	3.250	-	-	-	-	-	6.500	101 LBS	.395 LBS
129HL-10	10.00	10.00	4.000	-	6.000	-	-	-	8.250	3.250	-	-	-	-	-	6.500	108 LBS	.434 LBS
129HL-11	11.00	11.00	4.000	-	7.000	-	-	-	9.250	2.500	-	-	6.000	-	-	8.500	108 LBS	.472 LBS
129HL-12	12.00	12.00	4.000	-	8.000	-	-	-	10.250	2.500	-	-	6.000	-	-	8.500	104 LBS	.511 LBS
129HL-13	13.00	13.00	5.500	-	9.000	-	-	-	11.250	2.500	-	-	6.000	-	-	8.500	104 LBS	.554 LBS
129HL-14	14.00	14.00	5.500	-	10.000	-	-	-	12.250	2.500	-	5.000	9.000	-	-	11.500	101 LBS	.592 LBS
129HL-15	15.00	15.00	5.500	-	11.000	-	-	-	13.250	2.500	-	5.000	9.000	-	-	11.500	101 LBS	.631 LBS
129HL-16	16.00	16.00	5.500	-	7.500	9.750	12.000	-	14.250	2.500	-	5.000	9.000	-	-	11.500	98 LBS	.674 LBS
129HL-17	17.00	17.00	5.500	-	8.500	10.750	13.000	-	15.250	2.500	-	5.000	9.000	-	-	11.500	98 LBS	.716 LBS
129HL-18	18.00	18.00	5.500	-	9.500	11.750	14.000	-	16.250	2.500	-	5.000	8.500	11.000	-	13.500	94 LBS	.755 LBS
129HL-19	19.00	19.00	5.500	-	10.500	12.750	15.000	-	17.250	2.500	-	5.000	8.500	11.000	-	13.500	94 LBS	.798 LBS
129HL-20	20.00	20.00	5.500	-	11.500	13.750	16.000	-	18.250	2.500	-	5.000	8.500	11.000	-	13.500	90 LBS	.836 LBS
129HL-21	21.00	21.00	5.500	-	12.500	14.750	17.000	-	19.250	2.500	5.000	7.500	11.500	14.000	-	16.500	90 LBS	.875 LBS
129HL-22	22.00	22.00	5.500	-	13.500	15.750	18.000	-	20.250	2.500	5.000	7.500	11.500	14.000	-	16.500	87 LBS	.914 LBS
129HL-23	23.00	23.00	5.500	-	12.250	14.500	16.750	19.000	21.250	2.500	5.000	7.500	11.000	13.500	16.000	18.500	87 LBS	.955 LBS
129HL-24	24.00	24.00	5.500	-	13.250	15.500	17.750	20.000	22.250	2.500	5.000	7.500	11.000	13.500	16.000	18.500	85 LBS	.995 LBS
129HL-25	25.00	25.00	5.500	11.250	14.250	16.500	18.750	21.000	23.250	2.500	5.000	7.500	13.000	15.500	18.000	20.500	85 LBS	1.04 LBS
129HL-26	26.00	26.00	5.500	11.250	15.250	17.500	19.750	22.000	24.250	2.500	5.000	7.500	13.000	15.500	18.000	20.500	80 LBS	1.08 LBS

JONATHAN® Engineered Solutions

Irvine Technology Center
410 Exchange, Suite 200
Irvine, CA 92602
Tel. (714) 665-4400
Fax: (714) 368-7002
Website: www.jonathanengr.com
Engineer - Production - Integration/ Subassembly - Logistics
United States - Mexico - China - Taiwan

TOLERANCES UNLESS OTHERWISE NOTED			
.XX	.XXX	ANGLES	HOLES
± .01	± .005	± 1°	± .005

SHEET 1 OF 1

PART NUMBER : 129HL

DATE : 1/11

DESCRIPTION :

ALUMINUM
SERIES 129HL
LOAD RATING : 80-98 LBS

COPYRIGHT © 2011 JONATHAN ENGINEERED SOLUTIONS

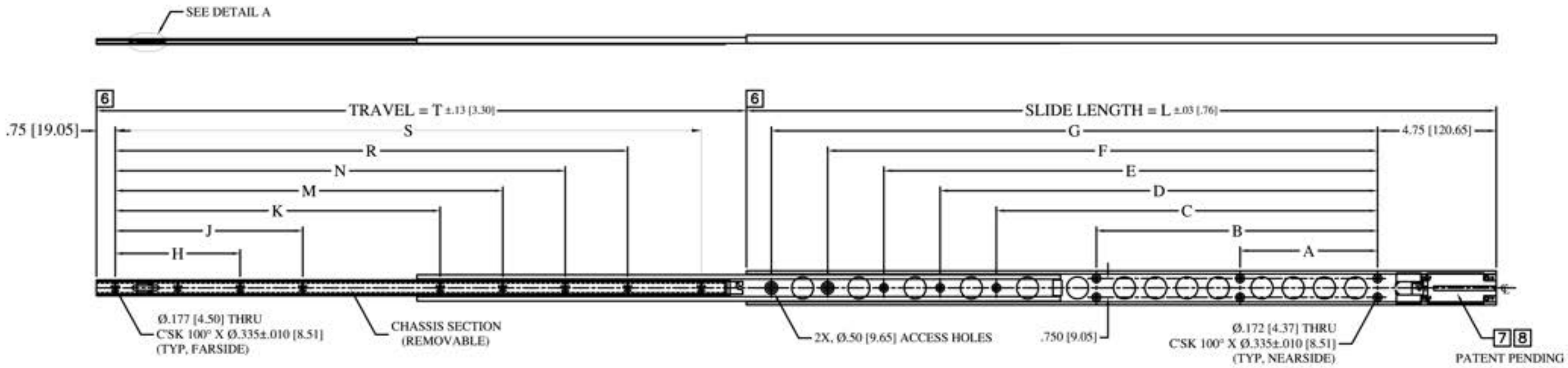

8 PATENT PENDING

7 SLIDE FEATURES A SELF CLOSING/DAMPENING DEVICE

6 THESE SURFACES ALIGN WHEN SLIDE IS IN THE CLOSED POSITION.

5. USE #8-32 100 DEG. FLAT HEAD MACHINE SCREW FOR MOUNTING THRU SLIDE MEMBERS.

4. SLIDE FEATURES QUICK DISCONNECT OF CHASSIS SECTION.

3. SLIDE IS SYMMETRICAL. MAY BE USED AS LEFT OR RIGHT HAND SLIDE.

2. FINISH: CHANNELS ARE ANODIZE PER MIL-A-8625 TYPE II, CLASS 1 CRES PARTS PASSIVATED PER MIL-S-5002.

1. MATERIAL: CHANNELS ARE FABRICATED FROM HIGH STRENGTH ALUMINUM ALLOYS. COMPONENT PARTS ARE 302/303 CRES AND HIGH STRENGTH ALUMINUM. BALLS ARE 440 CRES.

DETAIL A

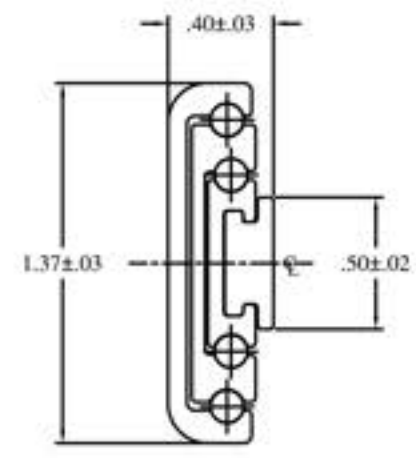

END VIEW

PART NO.	SLIDE LENGTH	SLIDE TRAVEL	CABINET SECTION							CHASSIS SECTION							SLIDE WEIGHT (LBS.)
SERIES – LENGTH	L	T	A	B	C	D	E	F	G	H	J	K	M	N	R	S	
129SC-10	10 / 254	9 / 229			2.000 / 50.80				4.250 / 109.90							3.500 / 88.90	.32
129SC-12	12 / 305	11 / 280	3.000 / 76.20		4.000 / 101.60				6.250 / 158.80	2.750 / 69.85						5.500 / 139.70	.39
129SC-14	14 / 356	13 / 330	4.000 / 101.60		6.000 / 152.40				8.250 / 209.50	3.250 / 82.55						6.500 / 165.10	.45
129SC-16	16 / 406	15 / 381	4.000 / 101.60		8.000 / 203.20				10.250 / 260.30	2.500 / 63.50			6.000 / 152.40			8.500 / 215.90	.51
129SC-18	18 / 457	17 / 432	5.500 / 139.70		10.000 / 254.00				12.250 / 311.10	2.500 / 63.50		5.000 / 127.00	9.000 / 228.60			11.500 / 292.10	.58
129SC-20	20 / 508	19 / 483	5.500 / 139.70		9.750 / 247.65	12.000 / 304.80			14.250 / 361.90	2.500 / 63.50		5.000 / 127.00	9.000 / 228.60			11.500 / 292.10	.64
129SC-22	22 / 559	21 / 533	5.500 / 139.70		9.500 / 241.30	11.750 / 298.40	14.000 / 355.60		16.250 / 412.80	2.500 / 63.50		5.000 / 127.00	8.500 / 215.90		11.000 / 279.40	13.500 / 342.90	.71
129SC-24	24 / 610	23 / 584	5.500 / 139.70		11.500 / 292.10	13.750 / 349.25	16.000 / 406.40		18.250 / 463.50	2.500 / 63.50		5.000 / 127.00	8.500 / 215.90		11.000 / 279.40	13.500 / 342.90	.77
129SC-26	26 / 660	25 / 635	5.500 / 139.70		13.500 / 342.90	15.750 / 400.05	18.000 / 457.20		20.250 / 514.40	2.500 / 63.50	5.000 / 127.00	7.500 / 190.50	11.500 / 292.10	14.000 / 355.60		16.500 / 419.10	.84
129SC-28	28 / 711	27 / 686	5.500 / 139.70		13.250 / 349.30	15.500 / 393.70	17.750 / 450.85	20.000 / 508.00	22.250 / 565.10	2.500 / 63.50	5.000 / 127.00	7.500 / 190.50	11.000 / 279.40	13.500 / 342.90	16.000 / 406.40	18.500 / 469.90	.91
129SC-30	30 / 762	29 / 737	5.500 / 139.70	11.250 / 285.75	15.250 / 400.00	17.500 / 444.50	19.750 / 501.85	22.000 / 558.80	24.250 / 615.90	2.500 / 63.50	5.000 / 127.00	7.500 / 190.50	13.000 / 330.20	15.500 / 393.70	18.000 / 457.20	20.500 / 520.70	.97

JONATHAN® Engineered Solutions

Irvine Technology Center
410 Exchange, Suite 200
Irvine, CA 92602
Tel. (714) 665-4400
Fax: (714) 368-7002
Website: www.jonathanengr.com
Engineer - Production - Integration/ Subassembly - Logistics
United States - Mexico - China - Taiwan

TOLERANCES UNLESS OTHERWISE NOTED				PART NUMBER :	DESCRIPTION :
.XX	.XXX	ANGLE	HOLES	129SC	ALUMINUM SERIES 129SC LOAD RATING :
± .01	± .005	± 1°	± .005	DATE : 1/11	
SHEET 1 OF 1					

COPYRIGHT © 2011 JONATHAN ENGINEERED SOLUTIONS

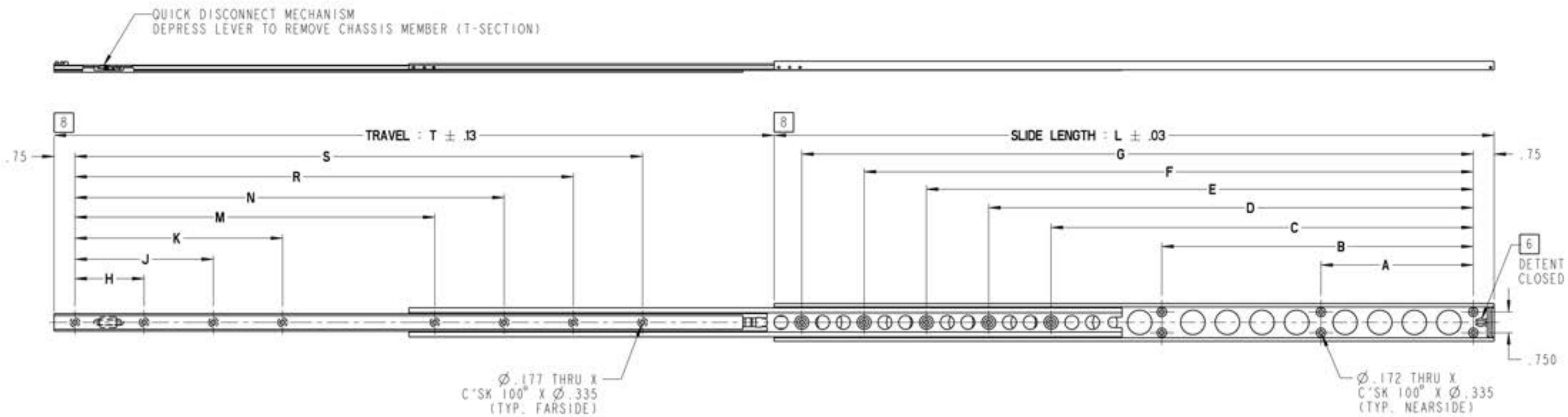

4 SLIDE FEATURES QUICK DISCONNECT OF CHASSIS SECTION

3. SLIDE IS SYMMETRICAL AND MAY BE USED AS LEFT OR RIGHT HAND SLIDE

2. FINISH: CHANNELS ARE ANODIZED PER MIL-A-8625 TYPE II, CLASS I, CRES PARTS ARE PASSIVATED PER SAE-AMS-QQ-P-35

1. MATERIALS: SLIDE CHANNELS ARE FABRICATED FROM HIGH STRENGTH ALUMINUM ALLOYS. COMPONENT PARTS ARE FABRICATED FROM HIGH STRENGTH ALUMINUM ALLOYS AND CORROSION RESISTANT STEEL. BALLS ARE 440 CRES. DETENT COMPONENT IS DELRIN

8 THESE SURFACES MUST ALIGN WHEN SLIDE IS IN THE CLOSED POSITION

7. HOLES OTHER THAN THOSE SHOWN MAY BE IN THE SLIDE AT JONATHAN OPTION

6 SLIDE IS PROVIDED WITH A DETENT CLOSED FEATURE WITH A PULL FORCE OF APPROX. 2 LBS. ±.5 LBS.

5. USE #8 X 100° FLAT HEAD MACHINE SCREWS FOR MOUNTING THRU SLIDE MEMBERS

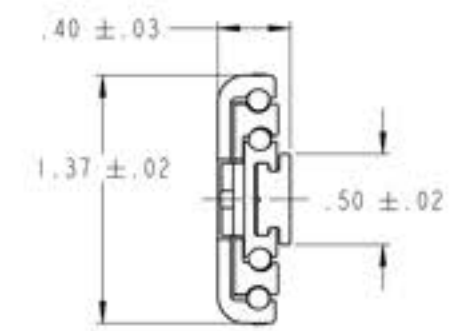

END VIEW

SERIES - LENGTH	SLIDE LENGTH	SLIDE TRAVEL	MOUNTING HOLE PATTERN														LOAD RATING	SLIDE WEIGHT
			CABINET SECTION							CHASSIS SECTION								
PART NO.	L	T	A	B	C	D	E	F	G	H	J	K	M	N	R	S	PER PAIR	
129TDC-6	6.00	6.00	-	-	2.000	-	-	-	4.250	-	-	-	-	-	-	3.500	98 LBS	.203 LBS
129TDC-7	7.00	7.00	-	-	3.000	-	-	-	5.250	2.500	-	-	-	-	-	4.500	98 LBS	.244 LBS
129TDC-8	8.00	8.00	3.000	-	4.000	-	-	-	6.250	2.750	-	-	-	-	-	5.500	101 LBS	.280 LBS
129TDC-9	9.00	9.00	3.000	-	5.000	-	-	-	7.250	3.250	-	-	-	-	-	6.500	101 LBS	.320 LBS
129TDC-10	10.00	10.00	4.000	-	6.000	-	-	-	8.250	3.250	-	-	-	-	-	6.500	108 LBS	.356 LBS
129TDC-11	11.00	11.00	4.000	-	7.000	-	-	-	9.250	2.500	-	-	6.000	-	-	8.500	108 LBS	.397 LBS
129TDC-12	12.00	12.00	4.000	-	8.000	-	-	-	10.250	2.500	-	-	6.000	-	-	8.500	104 LBS	.431 LBS
129TDC-13	13.00	13.00	5.500	-	9.000	-	-	-	11.250	2.500	-	-	6.000	-	-	8.500	104 LBS	.470 LBS
129TDC-14	14.00	14.00	5.500	-	10.000	-	-	-	12.250	2.500	-	5.000	9.000	-	-	11.500	101 LBS	.507 LBS
129TDC-15	15.00	15.00	5.500	-	11.000	-	-	-	13.250	2.500	-	5.000	9.000	-	-	11.500	101 LBS	.541 LBS
129TDC-16	16.00	16.00	5.500	-	7.500	9.750	12.000	-	14.250	2.500	-	5.000	9.000	-	-	11.500	98 LBS	.583 LBS
129TDC-17	17.00	17.00	5.500	-	8.500	10.750	13.000	-	15.250	2.500	-	5.000	9.000	-	-	11.500	98 LBS	.621 LBS
129TDC-18	18.00	18.00	5.500	-	9.500	11.750	14.000	-	16.250	2.500	-	5.000	8.500	11.000	-	13.500	94 LBS	.659 LBS
129TDC-19	19.00	19.00	5.500	-	10.500	12.750	15.000	-	17.250	2.500	-	5.000	8.500	11.000	-	13.500	94 LBS	.696 LBS
129TDC-20	20.00	20.00	5.500	-	11.500	13.750	16.000	-	18.250	2.500	-	5.000	8.500	11.000	-	13.500	90 LBS	.735 LBS
129TDC-21	21.00	21.00	5.500	-	12.500	14.750	17.000	-	19.250	2.500	5.000	7.500	11.500	14.000	-	16.500	90 LBS	.768 LBS
129TDC-22	22.00	22.00	5.500	-	13.500	15.750	18.000	-	20.250	2.500	5.000	7.500	11.500	14.000	-	16.500	87 LBS	.810 LBS
129TDC-23	23.00	23.00	5.500	-	12.250	14.500	16.750	19.000	21.250	2.500	5.000	7.500	11.000	13.500	16.000	18.500	87 LBS	.844 LBS
129TDC-24	24.00	24.00	5.500	-	13.250	15.500	17.750	20.000	22.250	2.500	5.000	7.500	11.000	13.500	16.000	18.500	85 LBS	.886 LBS
129TDC-25	25.00	25.00	5.500	11.250	14.250	16.500	18.750	21.000	23.250	2.500	5.000	7.500	13.000	15.500	18.000	20.500	85 LBS	.920 LBS
129TDC-26	26.00	26.00	5.500	11.250	15.250	17.500	19.750	22.000	24.250	2.500	5.000	7.500	13.000	15.500	18.000	20.500	80 LBS	.962 LBS

JONATHAN® Engineered Solutions

Irvine Technology Center
410 Exchange, Suite 200
Irvine, CA 92602
Tel. (714) 665-4400
Fax: (714) 368-7002
Website: www.jonathanengr.com
Engineer - Production - Integration/ Subassembly - Logistics
United States - Mexico - China - Taiwan

TOLERANCES UNLESS OTHERWISE NOTED			
.XX	.XXX	ANGLES	HOLES
± .01	± .005	± 1°	± .005

SHEET 1 OF 1

PART NUMBER : 129TDC

DATE : 1/11

DESCRIPTION :

ALUMINUM
129T DETENT CLOSED
LOAD RATING : 80-108 LBS.

COPYRIGHT © 2011 JONATHAN ENGINEERED SOLUTIONS

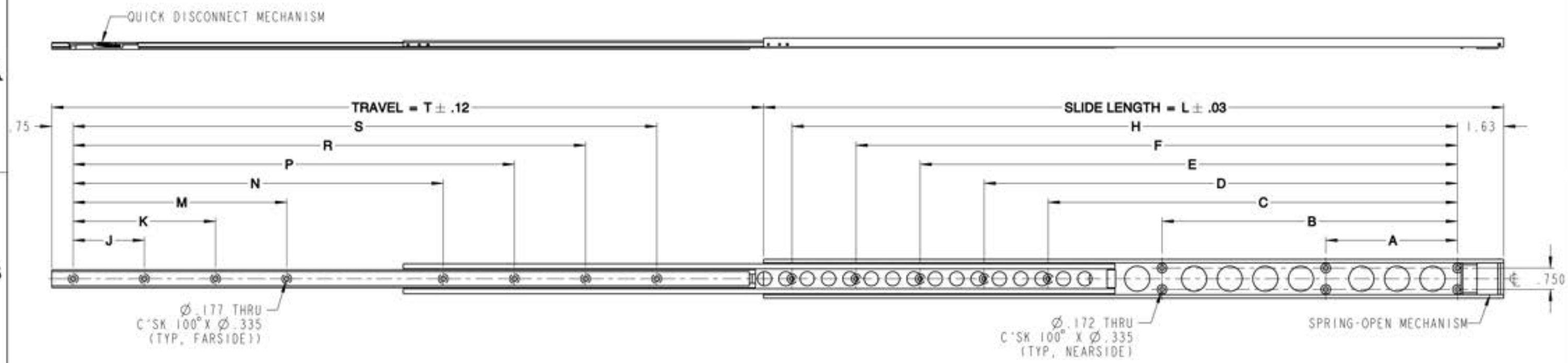

3. SLIDE IS SYMMETRICAL, MAY BE USED AS LEFT-HAND OR RIGHT-HAND MOUNTING UNIT.

2. FINISH: CHANNELS AND ALUMINUM COMPONENTS ARE ANODIZED PER MIL-A-8625, TYPE II, CLASS I. CRES COMPONENTS ARE PASSIVATED PER SAE-AMS-QQ-P-35.

1. MATERIAL: CHANNELS ARE FABRICATED FROM HIGH STRENGTH ALUMINUM ALLOYS WITH TENSILE STRENGTH OF 35,000 PSI, MIN. (PER ASTM B221) COMPONENT PARTS ARE 302 OR 303 CRES AND HIGH STRENGTH ALUMINUM. BALL BEARINGS ARE 440 CRES.

7. SPRING FORCE APPROXIMATELY 4 TO 6 LBS.

6. NUMBER OF LIGHTENING HOLES ON SLIDE TO BE DETERMINED BY JONATHAN ENGINEERED SOLUTIONS AND WILL VARY WITH SLIDE LENGTH.

5. USE #8 X 100° FLAT HEAD SCREWS FOR MOUNTING THRU SLIDE MEMBERS.

4. SLIDE IS PROVIDED WITH A SPRING-OPEN AND QUICK DISCONNECT OF CHASSIS SECTION.

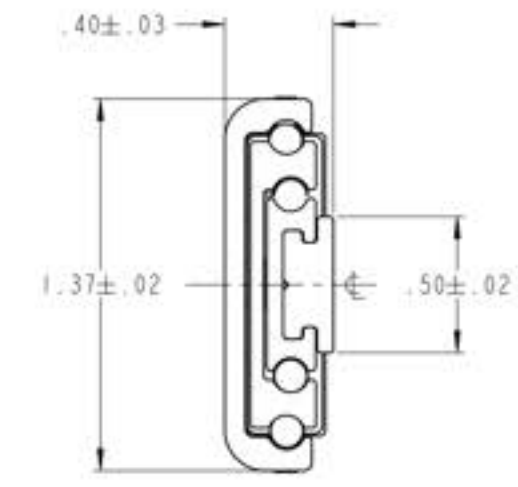

END VIEW

PART NO.	SLIDE LENGTH	SLIDE TRAVEL	CABINET SECTION							CHASSIS SECTION							LOAD RATING - PER PAIR	SLIDE WEIGHT
SERIES - LENGTH	L	T	A	B	C	D	E	F	H	J	K	M	N	P	R	S		
129TS-8-3	8	7	2.125	-	3.125	-	-	-	5.375	2.750	-	-	-	-	-	5.500	100 lbs	.288 lbs
129TS-9-3	9	8	2.125	-	4.125	-	-	-	6.375	3.250	-	-	-	-	-	6.500	100 lbs	.326 lbs
129TS-10-3	10	9	3.125	-	5.125	-	-	-	7.375	3.250	-	-	-	-	-	6.500	106 lbs	.361 lbs
129TS-11-3	11	10	3.125	-	6.125	-	-	-	8.375	2.500	-	-	6.000	-	-	8.500	106 lbs	.398 lbs
129TS-12-3	12	11	3.125	-	7.125	-	-	-	9.375	2.500	-	-	6.000	-	-	8.500	106 lbs	.435 lbs
129TS-13-3	13	12	4.625	-	8.125	-	-	-	10.375	2.500	-	-	6.000	-	-	8.500	106 lbs	.475 lbs
129TS-14-3	14	13	4.625	-	9.125	-	-	-	11.375	2.500	-	5.000	9.000	-	-	11.500	100 lbs	.505 lbs
129TS-15-3	15	14	4.625	-	7.875	10.125	-	-	12.375	2.500	-	5.000	9.000	-	-	11.500	100 lbs	.550 lbs
129TS-16-3	16	15	4.625	-	8.875	11.125	-	-	13.375	2.500	-	5.000	9.000	-	-	11.500	96 lbs	.583 lbs
129TS-17-3	17	16	4.625	-	7.625	9.875	12.125	-	14.375	2.500	-	5.000	9.000	-	-	11.500	96 lbs	.626 lbs
129TS-18-3	18	17	4.625	-	8.625	10.875	13.125	-	15.375	2.500	-	5.000	8.500	11.000	-	13.500	92 lbs	.663 lbs
129TS-19-3	19	18	4.625	-	9.625	11.875	14.125	-	16.375	2.500	-	5.000	8.500	11.000	-	13.500	92 lbs	.702 lbs
129TS-20-3	20	19	4.625	-	10.625	12.875	15.125	-	17.375	2.500	-	5.000	8.500	11.000	-	13.500	88 lbs	.735 lbs
129TS-21-3	21	20	4.625	-	11.625	13.875	16.125	-	18.375	2.500	5.000	7.500	11.500	14.000	-	16.500	88 lbs	.773 lbs
129TS-22-3	22	21	4.625	-	12.625	14.875	17.125	-	19.375	2.500	5.000	7.500	11.500	14.000	-	16.500	84 lbs	.811 lbs
129TS-23-3	23	22	4.625	-	11.375	13.625	15.875	18.125	20.375	2.500	5.000	7.500	11.000	13.500	16.000	18.500	84 lbs	.853 lbs
129TS-24-3	24	23	4.625	-	12.375	14.625	16.875	19.125	21.375	2.500	5.000	7.500	11.000	13.500	16.000	18.500	82 lbs	.886 lbs
129TS-25-3	25	24	4.625	10.375	13.375	15.625	17.875	20.125	22.375	2.500	5.000	7.500	13.000	15.500	18.000	20.500	82 lbs	.924 lbs
129TS-26-3	26	25	4.625	10.375	14.375	16.625	18.875	21.125	23.375	2.500	5.000	7.500	13.000	15.500	18.000	20.500	78 lbs	.963 lbs

JONATHAN® Engineered Solutions

Irvine Technology Center
410 Exchange, Suite 200
Irvine, CA 92602
Tel. (714) 665-4400
Fax: (714) 368-7002
Website: www.jonathanengr.com
Engineer - Production - Integration/ Subassembly - Logistics
United States - Mexico - China - Taiwan

TOLERANCES UNLESS OTHERWISE NOTED			
.XX	.XXX	ANGLES	HOLES
± .01	± .005	± 1°	± .005

SHEET 1 OF 1

PART NUMBER : 129TS

DATE : 1/11

DESCRIPTION :

ALUMINUM
129TS
LOAD RATING : 78-106 LBS

COPYRIGHT © 2011 JONATHAN ENGINEERED SOLUTIONS

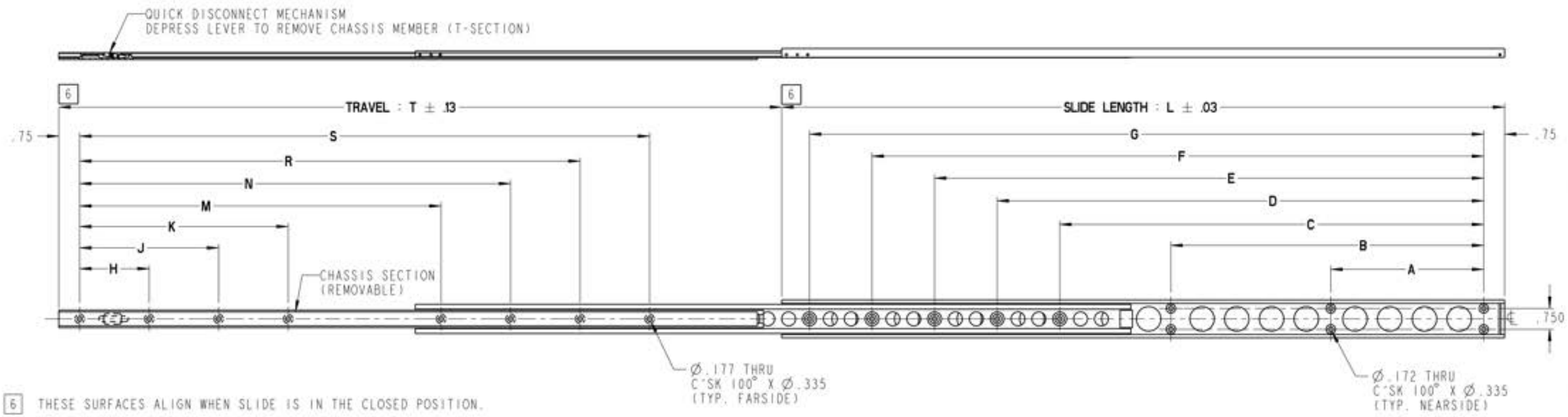

6 THESE SURFACES ALIGN WHEN SLIDE IS IN THE CLOSED POSITION.

5. USE #8 X 100° FLAT HEAD MACHINE SCREWS FOR MOUNTING THRU SLIDE MEMBERS

4. SLIDE FEATURES QUICK DISCONNECT OF CHASSIS SECTION

3. SLIDE IS SYMMETRICAL AND MAY BE USED AS LEFT OR RIGHT HAND SLIDE

2. FINISH: CHANNELS ARE ANODIZED PER MIL-A-8625 TYPE II, CLASS 2, COLOR: BLACK OR TYPE II, CLASS 1 (CLEAR). CRES PARTS ARE PASSIVATED PER SAE-AMS-QQ-P-35

1. MATERIALS: SLIDE CHANNELS ARE FABRICATED FROM HIGH STRENGTH ALUMINUM ALLOYS COMPONENT PART ARE FABRICATED FROM HIGH STRENGTH ALUMINUM ALLOYS AND CORROSION RESISTANT STEEL. BALLS ARE 440 CRES OR ACETAL. BUMPER IS SANTOPRENE (T.P.E.)

7. WHEN ORDERING PLEASE SPECIFY FINISH AND BALL MATERIAL BY USING THE FOLLOWING SUFFIX:

E 1 2 9 T P B - 20

- 20 — SLIDE LENGTH
- B — BLACK ANODIZE FINISH (BLANK IF CLEAR)
- P — POLYMER BALL BEARINGS (BLANK IF CRES BALL BEARINGS)
- E 1 2 9 T — SLIDE MODEL/SERIES

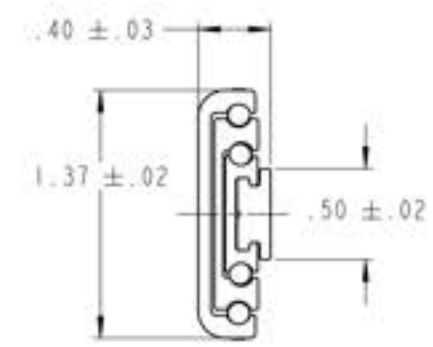

END VIEW

SERIES - LENGTH	SLIDE LENGTH	SLIDE TRAVEL	MOUNTING HOLE PATTERN														LOAD RATING (LBS)	SLIDE WEIGHT CRES BALLS (LBS)	SLIDE WEIGHT ACETAL BALLS (LBS)
			CABINET SECTION							CHASSIS SECTION									
PART NO.	L	T	A	B	C	D	E	F	G	H	J	K	M	N	R	S	PER PAIR		
E129T-6	6.00	6.00	-	-	2.000	-	-	-	4.250	-	-	-	-	-	-	3.500	98	.203	.199
E129T-7	7.00	7.00	-	-	3.000	-	-	-	5.250	2.500	-	-	-	-	-	4.500	98	.244	.233
E129T-8	8.00	8.00	3.000	-	4.000	-	-	-	6.250	2.750	-	-	-	-	-	5.500	101	.280	.268
E129T-9	9.00	9.00	3.000	-	5.000	-	-	-	7.250	3.250	-	-	-	-	-	6.500	101	.320	.300
E129T-10	10.00	10.00	4.000	-	6.000	-	-	-	8.250	3.250	-	-	-	-	-	6.500	108	.356	.334
E129T-11	11.00	11.00	4.000	-	7.000	-	-	-	9.250	2.500	-	-	6.000	-	-	8.500	108	.397	.368
E129T-12	12.00	12.00	4.000	-	8.000	-	-	-	10.250	2.500	-	-	6.000	-	-	8.500	104	.431	.402
E129T-13	13.00	13.00	5.500	-	9.000	-	-	-	11.250	2.500	-	-	6.000	-	-	8.500	104	.470	.432
E129T-14	14.00	14.00	5.500	-	10.000	-	-	-	12.250	2.500	-	5.000	9.000	-	-	11.500	101	.507	.461
E129T-15	15.00	15.00	5.500	-	11.000	-	-	-	13.250	2.500	-	5.000	9.000	-	-	11.500	101	.541	.497
E129T-16	16.00	16.00	5.500	-	7.500	9.750	12.000	-	14.250	2.500	-	5.000	9.000	-	-	11.500	98	.583	.529
E129T-17	17.00	17.00	5.500	-	8.500	10.750	13.000	-	15.250	2.500	-	5.000	9.000	-	-	11.500	98	.621	.565
E129T-18	18.00	18.00	5.500	-	9.500	11.750	14.000	-	16.250	2.500	-	5.000	8.500	11.000	-	13.500	94	.659	.600
E129T-19	19.00	19.00	5.500	-	10.500	12.750	15.000	-	17.250	2.500	-	5.000	8.500	11.000	-	13.500	94	.696	.632
E129T-20	20.00	20.00	5.500	-	11.500	13.750	16.000	-	18.250	2.500	-	5.000	8.500	11.000	-	13.500	90	.735	.662
E129T-21	21.00	21.00	5.500	-	12.500	14.750	17.000	-	19.250	2.500	5.000	7.500	11.500	14.000	-	16.500	90	.768	.701
E129T-22	22.00	22.00	5.500	-	13.500	15.750	18.000	-	20.250	2.500	5.000	7.500	11.500	14.000	-	16.500	87	.810	.727
E129T-23	23.00	23.00	5.500	-	12.250	14.500	16.750	19.000	21.250	2.500	5.000	7.500	11.000	13.500	16.000	18.500	87	.844	.763
E129T-24	24.00	24.00	5.500	-	13.250	15.500	17.750	20.000	22.250	2.500	5.000	7.500	11.000	13.500	16.000	18.500	85	.886	.798
E129T-25	25.00	25.00	5.500	11.250	14.250	16.500	18.750	21.000	23.250	2.500	5.000	7.500	13.000	15.500	18.000	20.500	85	.920	.830
E129T-26	26.00	26.00	5.500	11.250	15.250	17.500	19.750	22.000	24.250	2.500	5.000	7.500	13.000	15.500	18.000	20.500	80	.962	.864

JONATHAN® Engineered Solutions

Irvine Technology Center
410 Exchange, Suite 200
Irvine, CA 92602
Tel. (714) 665-4400
Fax: (714) 368-7002
Website: www.jonathanengr.com
Engineer - Production - Integration/ Subassembly - Logistics
United States - Mexico - China - Taiwan

TOLERANCES UNLESS OTHERWISE NOTED				PART NUMBER :	DESCRIPTION :
.XX	.XXX	ANGLES	HOLES	E129T	ALUMINUM SERIES E129T LOAD RATING : 80-108 LBS
± .01	± .005	± 1°	± .005	DATE : 1/11	
SHEET 1 OF 1					

COPYRIGHT © 2011 JONATHAN ENGINEERED SOLUTIONS

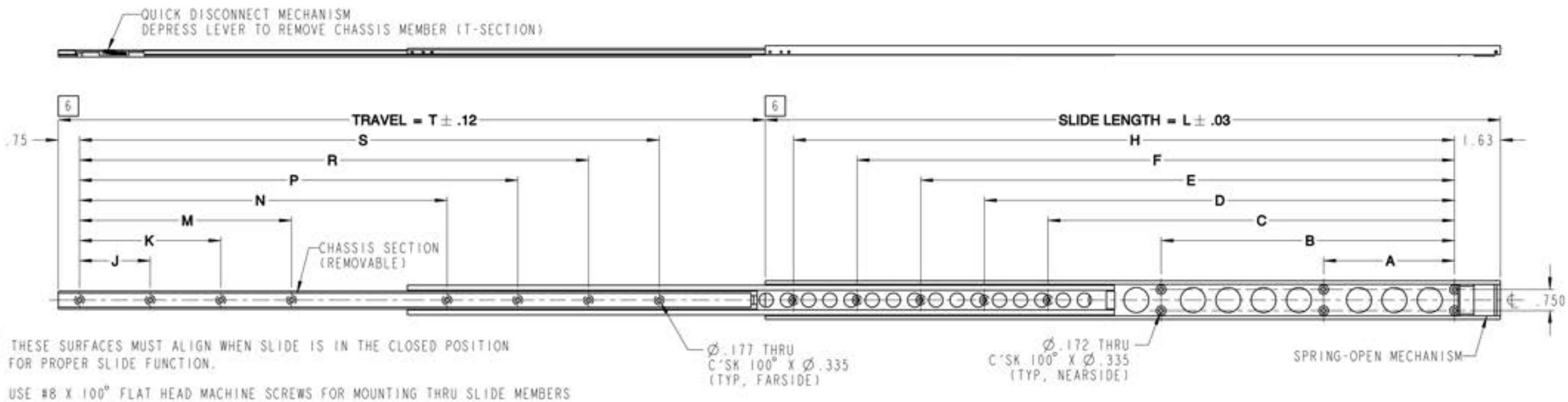

6 THESE SURFACES MUST ALIGN WHEN SLIDE IS IN THE CLOSED POSITION FOR PROPER SLIDE FUNCTION.

5. USE #8 X 100° FLAT HEAD MACHINE SCREWS FOR MOUNTING THRU SLIDE MEMBERS

4. SLIDE IS PROVIDED WITH A SPRING-OPEN AND QUICK DISCONNECT OF CHASSIS SECTION.

3. SLIDE IS SYMMETRICAL AND MAY BE USED AS LEFT OR RIGHT HAND SLIDE

2. FINISH: CHANNELS ARE ANODIZED PER MIL-A-8625 TYPE II, CLASS 2, COLOR: BLACK OR TYPE II, CLASS I (CLEAR). CRES PARTS ARE PASSIVATED PER SAE-AMS-QQ-P-35

1. MATERIALS: SLIDE CHANNELS ARE FABRICATED FROM HIGH STRENGTH ALUMINUM ALLOYS COMPONENT PART ARE FABRICATED FROM HIGH STRENGTH ALUMINUM ALLOYS AND CORROSION RESISTANT STEEL. BALLS ARE 440 CRES OR ACETAL. BUMPER IS SANTOPRENE (T.P.E.) SPRING-OPEN MECHANISM IS NYLON AND SPRINGS ARE STAINLESS STEEL

8. SPRING FORCE APPROXIMATELY 4 TO 6 LBS. PER SLIDE

7. WHEN ORDERING PLEASE SPECIFY FINISH AND BALL MATERIAL BY USING THE FOLLOWING SUFFIX:

E 1 2 9 T S P B - 20 - 3

- SPRING FORCE 4-6 LBS./SLIDE
- SLIDE LENGTH
- BLACK ANODIZE FINISH (BLANK IF CLEAR)
- POLYMER BALL BEARINGS (BLANK IF CRES BALL BEARINGS)
- SPRING OPEN DEVICE
- SLIDE MODEL/SERIES

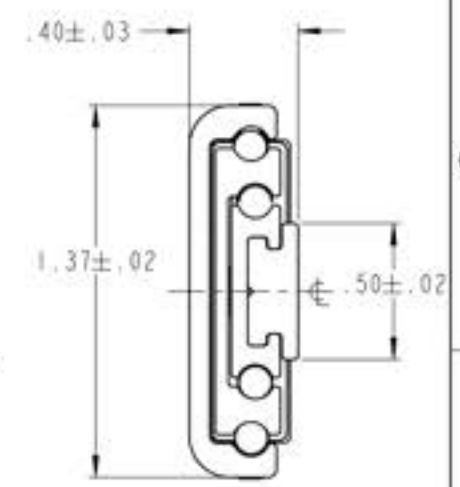

END VIEW

PART NO.	SLIDE LENGTH	SLIDE TRAVEL	CABINET SECTION							CHASSIS SECTION							LOAD RATING (LBS) PER PAIR	SLIDE WEIGHT CRES BALLS (LBS)	SLIDE WEIGHT ACETAL BALLS (LBS)
SERIES - LENGTH	L	T	A	B	C	D	E	F	H	J	K	M	N	P	R	S			
E129TS-8-3	8	7	2.125	-	3.125	-	-	-	5.375	2.750	-	-	-	-	-	5.500	100	.288	.268
E129TS-9-3	9	8	2.125	-	4.125	-	-	-	6.375	3.250	-	-	-	-	-	6.500	100	.326	.305
E129TS-10-3	10	9	3.125	-	5.125	-	-	-	7.375	3.250	-	-	-	-	-	6.500	106	.361	.332
E129TS-11-3	11	10	3.125	-	6.125	-	-	-	8.375	2.500	-	-	6.000	-	-	8.500	106	.398	.365
E129TS-12-3	12	11	3.125	-	7.125	-	-	-	9.375	2.500	-	-	6.000	-	-	8.500	106	.435	.398
E129TS-13-3	13	12	4.625	-	8.125	-	-	-	10.375	2.500	-	-	6.000	-	-	8.500	106	.475	.430
E129TS-14-3	14	13	4.625	-	9.125	-	-	-	11.375	2.500	-	5.000	9.000	-	-	11.500	100	.505	.460
E129TS-15-3	15	14	4.625	-	7.875	10.125	-	-	12.375	2.500	-	5.000	9.000	-	-	11.500	100	.550	.496
E129TS-16-3	16	15	4.625	-	8.875	11.125	-	-	13.375	2.500	-	5.000	9.000	-	-	11.500	96	.583	.529
E129TS-17-3	17	16	4.625	-	7.625	9.875	12.125	-	14.375	2.500	-	5.000	9.000	-	-	11.500	96	.626	.566
E129TS-18-3	18	17	4.625	-	8.625	10.875	13.125	-	15.375	2.500	-	5.000	8.500	11.000	-	13.500	92	.663	.600
E129TS-19-3	19	18	4.625	-	9.625	11.875	14.125	-	16.375	2.500	-	5.000	8.500	11.000	-	13.500	92	.702	.635
E129TS-20-3	20	19	4.625	-	10.625	12.875	15.125	-	17.375	2.500	-	5.000	8.500	11.000	-	13.500	88	.735	.664
E129TS-21-3	21	20	4.625	-	11.625	13.875	16.125	-	18.375	2.500	5.000	7.500	11.500	14.000	-	16.500	88	.773	.698
E129TS-22-3	22	21	4.625	-	12.625	14.875	17.125	-	19.375	2.500	5.000	7.500	11.500	14.000	-	16.500	84	.811	.731
E129TS-23-3	23	22	4.625	-	11.375	13.625	15.875	18.125	20.375	2.500	5.000	7.500	11.000	13.500	16.000	18.500	84	.853	.766
E129TS-24-3	24	23	4.625	-	12.375	14.625	16.875	19.125	21.375	2.500	5.000	7.500	11.000	13.500	16.000	18.500	82	.886	.798
E129TS-25-3	25	24	4.625	10.375	13.375	15.625	17.875	20.125	22.375	2.500	5.000	7.500	13.000	15.500	18.000	20.500	82	.924	.835
E129TS-26-3	26	25	4.625	10.375	14.375	16.625	18.875	21.125	23.375	2.500	5.000	7.500	13.000	15.500	18.000	20.500	78	.963	.866

JONATHAN® Engineered Solutions

Irvine Technology Center
410 Exchange, Suite 200
Irvine, CA 92602
Tel. (714) 665-4400
Fax: (714) 368-7002
Website: www.jonathanengr.com
Engineer - Production - Integration/ Subassembly - Logistics
United States - Mexico - China - Taiwan

TOLERANCES UNLESS OTHERWISE NOTED				PART NUMBER :	DESCRIPTION :
.XX	.XXX	ANGLES	HOLES	E129TS	ALUMINUM E129TS LOAD RATING : 76-106 LBS.
± .01	± .005	± 1°	± .005	DATE : 1/11	
SHEET 1 OF 1					

COPYRIGHT © 2011 JONATHAN ENGINEERED SOLUTIONS

NOTES:

1. WHEN ORDERING WITH LOCK, SPECIFY L.H. OR R.H. (EX:130L–12L, 130L–12R) (LEFT SLIDE AS SHOWN, RIGHT SLIDE OPPOSITE)
2. SLIDE CAN BE PROVIDED WITH LOCK TYPE "E". LOCKS IN OPEN POSITION ONLY. (OPTIONAL). "L" USED AS PART NO. MODIFIER.
3. FOR BRACKETS, SEE BRACKETRY SECTION.

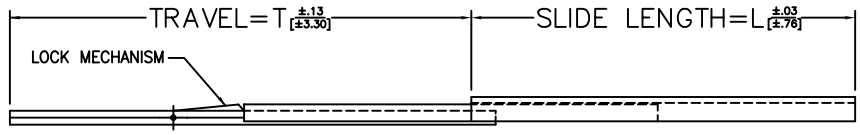

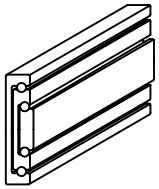

ISOMETRIC REPRESENTATION

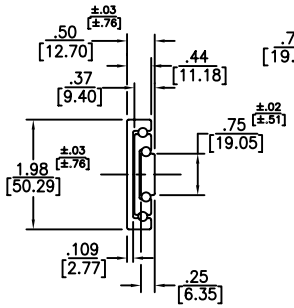

END VIEW

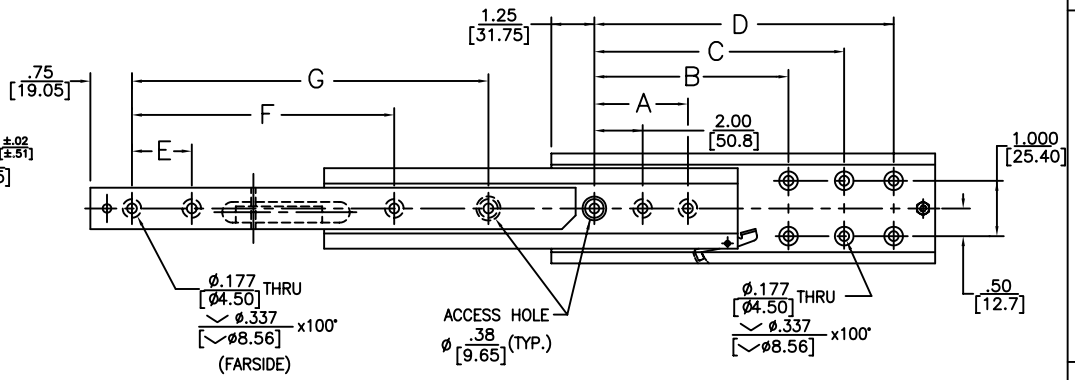

PART NO.	SLIDE LENGTH	SLIDE TRAVEL	MOUNTING HOLE PATTERN							LOAD RATING
SERIES – LENGTH	DIM. L	DIM. T	OUTER MEMBER A	B	C	D	INNER MEMBER E	F	G	PER PAIR
130–10 / 130L–10	10 / 254	9 / 228.6			5 / 127	8 / 203.2		5 / 127	8 / 203.2	129 LBS / 58 KG
130–12 / 130L–12	12 / 304.8	11 / 279.4			6 / 152.4	10 / 254	2 / 50.8	6 / 152.4	10 / 254	138 LBS / 62 KG
130–14 / 130L–14	14 / 355.6	13 / 330.2			7 / 177.8	12 / 304.8	3 / 76.2	8 / 203.2	12 / 304.8	132 LBS / 59 KG
130–16 / 130L–16	16 / 406.4	15 / 381	4 / 101.6	8 / 203.2	11 / 279.4	14 / 355.6	4 / 101.6	9 / 228.6	14 / 355.6	124 LBS / 56 KG
130–18 / 130L–18	18 / 457.2	17 / 431.8	5 / 127	10 / 254	13 / 330.2	16 / 406.4	5 / 127	11 / 279.4	16 / 406.4	108 LBS / 48 KG
130–20 / 130L–20	20 / 508	19 / 482.6	5 / 127	10 / 254	14 / 355.6	18 / 457.2	6 / 152.4	12 / 304.8	18 / 457.2	97 LBS / 43 KG
130–22 / 130L–22	22 / 558.8	21 / 533.4	6 / 152.4	12 / 304.8	16 / 406.4	20 / 508	7 / 177.8	13 / 330.2	20 / 508	88 LBS / 39 KG
130–24 / 130L–24	24 / 609.6	23 / 584.2	6 / 152.4	12 / 304.8	17 / 431.8	22 / 558.8	7 / 177.8	15 / 381	22 / 558.8	84 LBS / 38 KG
130–26 / 130L–26	26 / 660.4	25 / 635	7 / 177.8	14 / 355.6	19 / 482.6	24 / 609.6	8 / 203.2	16 / 406.4	24 / 609.6	81 LBS / 36 KG
130–28 / 130L–28	28 / 711.2	27 / 685.8	7 / 177.8	14 / 355.6	20 / 508	26 / 660.4	9 / 228.6	17 / 431.8	26 / 660.4	78 LBS / 35 KG

JONATHAN® Engineered Solutions

Irvine Technology Center
410 Exchange, Suite 200
Irvine, CA 92602
Tel: (714) 665–4400
Website: www.JonathanEngr.com
Engineering • Production • Integration/Subassembly • Logistics
United States • Mexico • China • Taiwan

DIMENSIONS SHOWN AS: IN. / [MM]

TOLERANCE UNLESS OTHERWISE NOTED	
.XX / .X	±.010 / [±.3]
.XXX / .XX	±.005 / [±.13]
ANGLES	±1°

SERIES: 130

DATE: 1/11

DESCRIPTION:

ALUMINUM
SERIES 130
LOAD RATING: 78–138 LBS./ 35–62 KG.

COPYRIGHT © 2011 JONATHAN ENGINEERED SOLUTIONS

NOTES:

1. LEFT SLIDE AS SHOWN, RIGHT SLIDE OPPOSITE.
2. FOR BRACKETS, SEE BRACKETRY SECTION.
3. SLIDE LOCKS IN OPEN POSITION ONLY.
4. SLIDE FEATURES QUICK DISCONNECT OF CHASSIS SECTION.

5 AMOUNT OF ROLLERS TO BE DETERMINED BY JONATHAN ENGINEERED SOLUTIONS

6 CABINET SECTION OR CHASSIS SECTION MAY BE PUCHASED SEPARATELY AND ARE INTERCHANGEABLE. CONTACT JONATHAN FOR ORDERING INSTRUCTIONS.

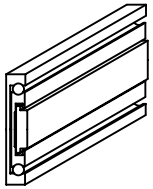

ISOMETRIC REPRESENTATION

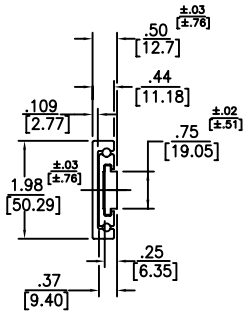

END VIEW

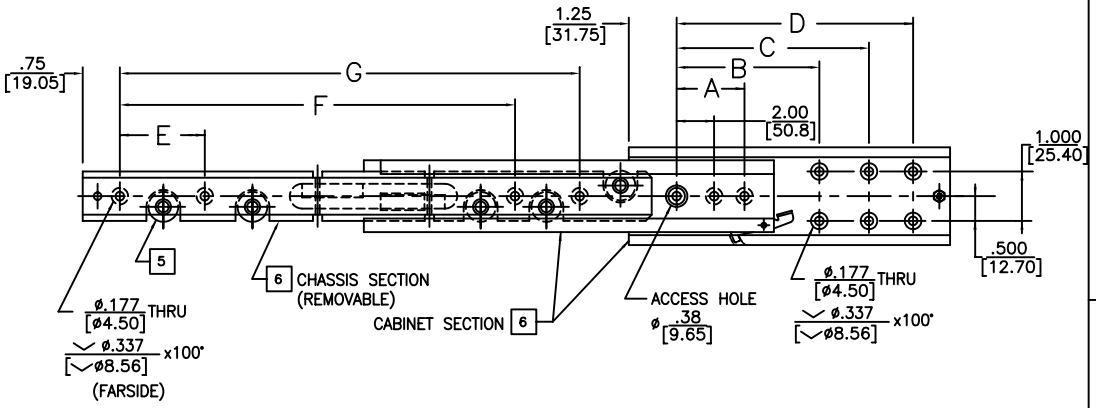

PART NO.	SLIDE LENGTH	SLIDE TRAVEL	MOUNTING HOLE PATTERN							LOAD RATING
SERIES – LENGTH	DIM. L	DIM. T	OUTER MEMBER A	B	C	D	CHASSIS SECTION E	F	G	PER PAIR
130QD–10	10 / 254	9 / 228.6			5 / 127	8 / 203.2	1.75 / 44.45		7.5 / 190.5	129 LBS / 58 KG
130QD–12	12 / 304.8	11 / 279.4			6 / 152.4	10 / 254	2.5 / 63.5	8.5 / 215.9	9.5 / 241.3	138 LBS / 62 KG
130QD–14	14 / 355.6	13 / 330.2			7 / 177.8	12 / 304.8	2.5 / 63.5	9.5 / 241.3	11.5 / 292.1	132 LBS / 59 KG
130QD–16	16 / 406.4	15 / 381	4 / 101.6	8 / 203.2	11 / 279.4	14 / 355.6	3 / 76.2	10.5 / 266.7	13.5 / 342.9	124 LBS / 56 KG
130QD–18	18 / 457.2	17 / 431.8	5 / 127	10 / 254	13 / 330.2	16 / 406.4	3.5 / 88.9	11.5 / 292.1	15.5 / 393.7	108 LBS / 48 KG
130QD–20	20 / 508	19 / 482.6	5 / 127	10 / 254	14 / 355.6	18 / 457.2	4.5 / 114.3	13 / 330.2	17.5 / 444.5	97 LBS / 43 KG
130QD–22	22 / 558.8	21 / 533.4	6 / 152.4	12 / 304.8	16 / 406.4	20 / 508	5.5 / 139.7	14 / 355.6	19.5 / 495.3	88 LBS / 39 KG
130QD–24	24 / 609.6	23 / 584.2	6 / 152.4	12 / 304.8	17 / 431.8	22 / 558.8	6.5 / 165.1	15 / 381	21.5 / 546.1	84 LBS / 38 KG
130QD–26	26 / 660.4	25 / 635	7 / 177.8	14 / 355.6	19 / 482.6	24 / 609.6	7.5 / 190.5	16 / 406.4	23.5 / 596.9	81 LBS / 36 KG
130QD–28	28 / 711.2	27 / 685.8	7 / 177.8	14 / 355.6	20 / 508	26 / 660.4	8.5 / 215.9	17 / 431.8	25.5 / 647.7	78 LBS / 35 KG

JONATHAN® Engineered Solutions
Irvine Technology Center
410 Exchange, Suite 200
Irvine, CA 92602
Tel: (714) 665–4400
Website: www.JonathanEngr.com
Engineering • Production • Integration/Subassembly • Logistics
United States • Mexico • China • Taiwan

DIMENSIONS SHOWN AS: IN. / [MM]

TOLERANCE UNLESS OTHERWISE NOTED

.XX / .X	±.010 / [±.3]
.XXX / .XX	±.005 / [±.13]
ANGLES	±1°

SERIES: 130QD

DATE: 1/11

DESCRIPTION:

ALUMINUM
SERIES 130QD
LOAD RATING: 78–138 LBS./ 35–62 KG.

COPYRIGHT © 2011 JONATHAN ENGINEERED SOLUTIONS

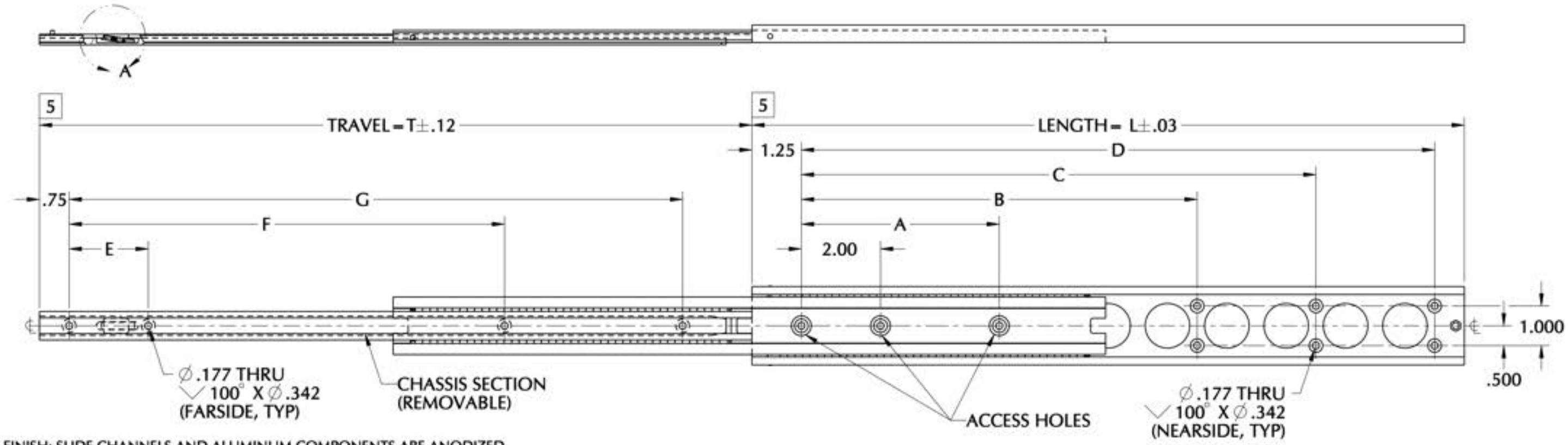

2. FINISH: SLIDE CHANNELS AND ALUMINUM COMPONENTS ARE ANODIZED PER MIL-A-8625, TYPE II, CLASS 1. CRES COMPONENTS ARE PASSIVATED PER SAE-AMS-QQ-P-35.

1. MATERIAL: SLIDE CHANNELS ARE FABRICATED FROM HIGH STRENGTH ALUMINUM ALLOYS WITH TENSILE STRENGTH OF 35,000 PSI MIN. (PER ASTM B221), COMPONENT PARTS ARE 302 OR 303 CRES AND HIGH STRENGTH ALUMINUM. BALL BEARINGS ARE 440 CRES.

5 FOR REFERENCE PURPOSE ONLY, THESE SURFACES ALIGN WHEN SLIDE IS IN THE CLOSED POSITION.

4. SLIDE FEATURES QUICK DISCONNECT OF CHASSIS SECTION.

3. SLIDE IS SYMMETRICAL AND MAY BE USED AS LEFT OR RIGHT HAND SLIDE.

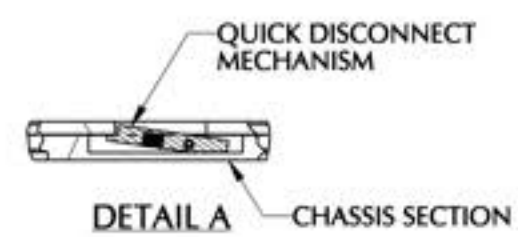

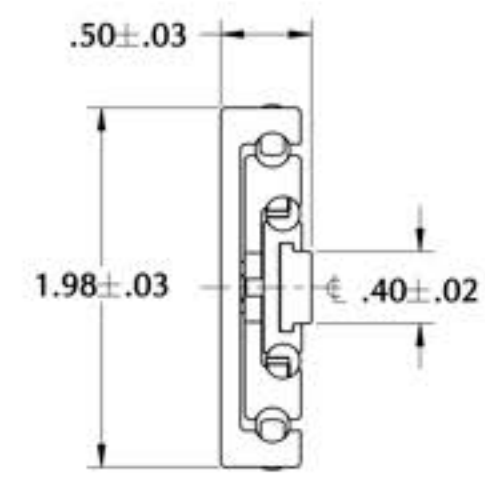

END VIEW

PART NO.	SLIDE LENGTH	SLIDE TRAVEL	MOUNTING HOLE PATTERN							LOAD RATING PER PAIR (LBS)	SLIDE WEIGHT (LBS)
			CABINET SECTION				CHASSIS SECTION				
SERIES - LENGTH	DIM. L	DIM. T	A	B	C	D	E	F	G		
130QDT-10	10.00	10.00	-	-	5.000	8.000	-	5.000	7.500	129	.75
130QDT-11	11.00	11.00	-	-	6.000	9.000	2.000	6.000	8.500	129	.81
130QDT-12	12.00	12.00	-	-	6.000	10.000	2.000	6.000	9.500	138	.90
130QDT-13	13.00	13.00	-	-	7.000	11.000	3.000	7.000	10.500	138	.97
130QDT-14	14.00	14.00	-	-	7.000	12.000	3.000	8.000	11.500	132	1.04
130QDT-15	15.00	15.00	4.000	7.000	9.000	13.000	4.000	9.000	12.500	132	1.13
130QDT-16	16.00	16.00	4.000	8.000	11.000	14.000	4.000	9.000	13.500	124	1.19
130QDT-17	17.00	17.00	4.000	9.000	12.000	15.000	5.000	11.000	14.500	124	1.26
130QDT-18	18.00	18.00	5.000	10.000	13.000	16.000	5.000	11.000	15.500	108	1.34
130QDT-19	19.00	19.00	5.000	10.000	14.000	17.000	6.000	12.000	16.500	108	1.43
130QDT-20	20.00	20.00	5.000	10.000	14.000	18.000	6.000	12.000	17.500	97	1.50
130QDT-21	21.00	21.00	6.000	11.000	15.000	19.000	7.000	13.000	18.500	97	1.58
130QDT-22	22.00	22.00	6.000	12.000	16.000	20.000	7.000	13.000	19.500	88	1.66
130QDT-23	23.00	23.00	6.000	12.000	17.000	21.000	7.000	15.000	20.500	88	1.73
130QDT-24	24.00	24.00	6.000	12.000	17.000	22.000	7.000	15.000	21.500	84	1.80
130QDT-25	25.00	25.00	7.000	14.000	18.000	23.000	8.000	16.000	22.500	84	1.89
130QDT-26	26.00	26.00	7.000	14.000	19.000	24.000	8.000	16.000	23.500	81	1.94
130QDT-27	27.00	27.00	7.000	14.000	20.000	25.000	9.000	17.000	24.500	81	2.02
130QDT-28	28.00	28.00	7.000	14.000	20.000	26.000	9.000	17.000	25.500	78	2.09

JONATHAN® Engineered Solutions

Irvine Technology Center
410 Exchange, Suite 200
Irvine, CA 92602
Tel. (714) 665-4400
Fax: (714) 368-7002
Website: www.jonathanengr.com
Engineer - Production - Integration/ Subassembly - Logistics
United States - Mexico - China - Taiwan

TOLERANCES UNLESS OTHERWISE NOTED				PART NUMBER :	DESCRIPTION :
.XX	.XXX	ANGLES	HOLES	130QDT	ALUMINUM SERIES 130QDT LOAD RATING : 78-138 LBS
± .01	± .005	± 1°	± .005	DATE : 1/11	
SHEET 1 OF 1					

COPYRIGHT © 2011 JONATHAN ENGINEERED SOLUTIONS

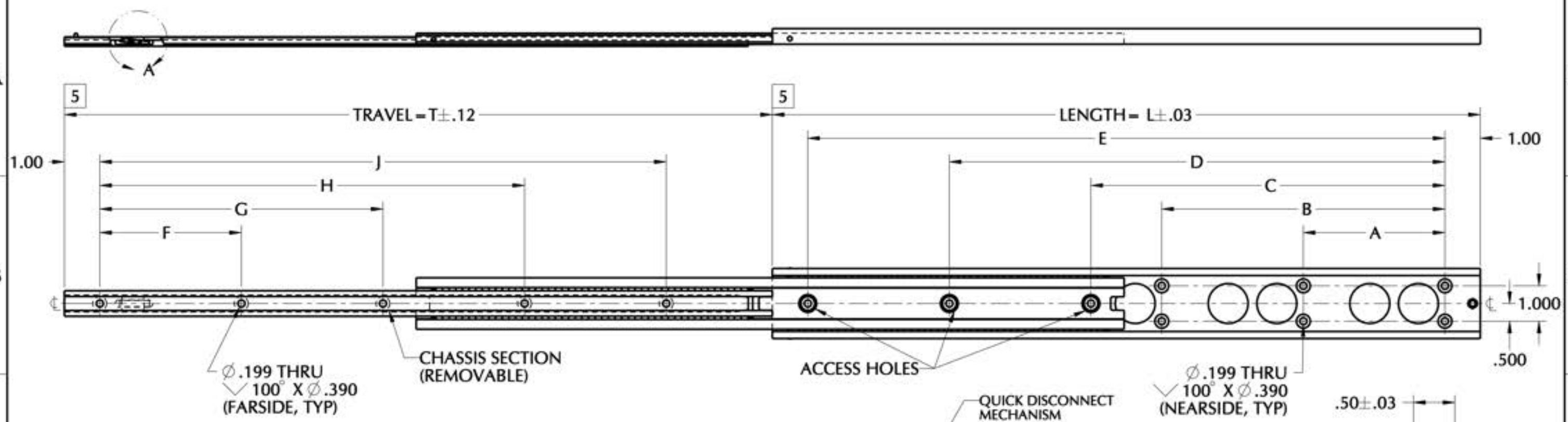

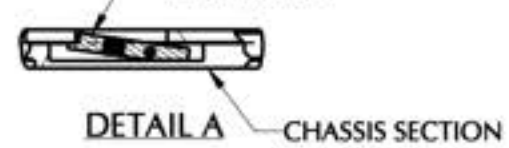

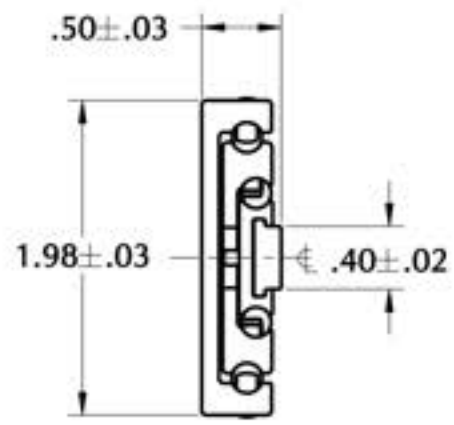

END VIEW

PART NO.	SLIDE LENGTH	SLIDE TRAVEL	MOUNTING HOLE PATTERN									LOAD RATING PER PAIR (LBS)	SLIDE WEIGHT (LBS)
			CABINET SECTION					CHASSIS SECTION					
SERIES - LENGTH	DIM. L	DIM. T	A	B	C	D	E	F	G	H	J		
130T-10	10.00	10.00	3.000	-	-	5.000	8.000	3.000	-	-	6.000	160	.82
130T-11	11.00	11.00	3.000	-	-	6.000	9.000	3.000	-	-	7.000	160	.89
130T-12	12.00	12.00	3.000	-	-	7.000	10.000	3.000	-	-	8.000	165	.96
130T-13	13.00	13.00	5.000	-	-	8.000	11.000	3.000	6.000	-	9.000	165	1.03
130T-14	14.00	14.00	5.000	-	-	9.000	12.000	3.000	7.000	-	10.000	165	1.10
130T-15	15.00	15.00	5.000	-	-	10.000	13.000	3.000	8.000	-	11.000	170	1.17
130T-16	16.00	16.00	5.000	-	8.000	11.000	14.000	3.000	6.000	9.000	12.000	175	1.25
130T-17	17.00	17.00	5.000	-	9.000	12.000	15.000	3.000	6.000	10.000	13.000	175	1.31
130T-18	18.00	18.00	5.000	-	10.000	13.000	16.000	3.000	6.000	11.000	14.000	175	1.38
130T-19	19.00	19.00	5.000	-	11.000	14.000	17.000	3.000	6.000	12.000	15.000	170	1.45
130T-20	20.00	20.00	4.000	8.000	10.000	14.000	18.000	4.000	8.000	12.000	16.000	170	1.52
130T-21	21.00	21.00	4.000	8.000	11.000	15.000	19.000	4.000	8.000	12.000	16.000	170	1.59
130T-22	22.00	22.00	4.000	8.000	12.000	16.000	20.000	4.000	8.000	13.000	17.000	165	1.66
130T-23	23.00	23.00	4.000	8.000	13.000	17.000	21.000	4.000	8.000	14.000	18.000	165	1.72
130T-24	24.00	24.00	5.000	10.000	14.000	18.000	22.000	4.000	8.000	15.000	19.000	160	1.80
130T-25	25.00	25.00	5.000	10.000	15.000	19.000	23.000	4.000	8.000	16.000	20.000	160	1.86
130T-26	26.00	26.00	5.000	10.000	14.000	19.000	24.000	5.000	10.000	16.000	21.000	160	1.93
130T-27	27.00	27.00	5.000	10.000	15.000	20.000	25.000	5.000	10.000	17.000	22.000	160	2.00
130T-28	28.00	28.00	5.000	10.000	16.000	21.000	26.000	5.000	10.000	18.000	23.000	155	2.07
130T-29	29.00	29.00	5.000	10.000	17.000	22.000	27.000	5.000	10.000	19.000	24.000	155	2.15
130T-30	30.00	30.00	6.000	12.000	16.000	22.000	28.000	6.000	12.000	18.000	24.000	150	2.21
130T-31	31.00	31.00	6.000	12.000	17.000	23.000	29.000	6.000	12.000	19.000	25.000	150	2.28
130T-32	32.00	32.00	6.000	12.000	18.000	24.000	30.000	6.000	12.000	20.000	26.000	150	2.35
130T-33	33.00	33.00	6.000	12.000	19.000	25.000	31.000	6.000	12.000	21.000	27.000	140	2.43
130T-34	34.00	34.00	7.000	14.000	18.000	25.000	32.000	7.000	14.000	21.000	28.000	140	2.50
130T-35	35.00	35.00	7.000	14.000	19.000	26.000	33.000	7.000	14.000	22.000	29.000	130	2.56
130T-36	36.00	36.00	7.000	14.000	20.000	27.000	34.000	7.000	14.000	23.000	30.000	130	2.63

5 FOR REFERENCE PURPOSE ONLY, THESE SURFACES ALIGN WHEN SLIDE IS IN THE CLOSED POSITION.

4. SLIDE FEATURES QUICK DISCONNECT OF CHASSIS SECTION.

3. SLIDE IS SYMMETRICAL AND MAY BE USED AS LEFT OR RIGHT HAND SLIDE.

2. FINISH: SLIDE CHANNELS AND ALUMINUM COMPONENTS ARE ANODIZED PER MIL-A-8625, TYPE II, CLASS 1. CRES COMPONENTS ARE PASSIVATED PER SAE-AMS-QQ-P-35.

1. MATERIAL: SLIDE CHANNELS ARE FABRICATED FROM HIGH STRENGTH ALUMINUM ALLOYS WITH TENSILE STRENGTH OF 35,000 PSI MIN. (PER ASTM B221), COMPONENT PARTS ARE 302/303 CRES AND HIGH STRENGTH ALUMINUM. BALL BEARINGS ARE 440 CRES.

JONATHAN® Engineered Solutions

Irvine Technology Center
410 Exchange, Suite 200
Irvine, CA 92602
Tel. (714) 665-4400
Fax: (714) 368-7002
Website: www.jonathanengr.com
Engineer - Production - Integration/ Subassembly - Logistics
United States - Mexico - China - Taiwan

TOLERANCES UNLESS OTHERWISE NOTED				PART NUMBER :	DESCRIPTION :
.XX	.XXX	ANGLES	HOLES	130T	ALUMINUM 130T LOAD RATING : 130-175 LBS.
± .01	± .005	± 1°	± .005	DATE : 1/11	
SHEET 1 OF 1					

COPYRIGHT © 2011 JONATHAN ENGINEERED SOLUTIONS

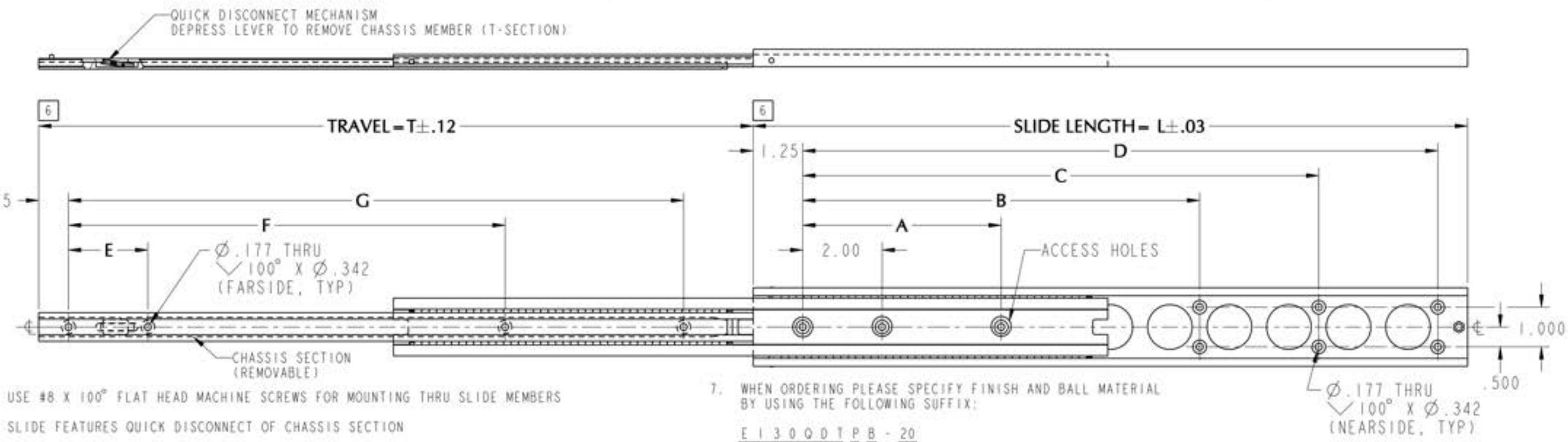

5. USE #8 X 100° FLAT HEAD MACHINE SCREWS FOR MOUNTING THRU SLIDE MEMBERS

4. SLIDE FEATURES QUICK DISCONNECT OF CHASSIS SECTION

3. SLIDE IS SYMMETRICAL AND MAY BE USED AS LEFT OR RIGHT HAND SLIDE

2. FINISH: CHANNELS ARE ANODIZED PER MIL-A-8625 TYPE II, CLASS 2, COLOR: BLACK OR TYPE II, CLASS 1 (CLEAR). CRES PARTS ARE PASSIVATED PER SAE-AMS-QQ-P-35

1. MATERIALS: SLIDE CHANNELS ARE FABRICATED FROM HIGH STRENGTH ALUMINUM ALLOYS COMPONENT PART ARE FABRICATED FROM HIGH STRENGTH ALUMINUM ALLOYS AND CORROSION RESISTANT STEEL. BALLS ARE 440 CRES OR ACETAL.

7. WHEN ORDERING PLEASE SPECIFY FINISH AND BALL MATERIAL BY USING THE FOLLOWING SUFFIX:

E 1 3 0 Q D T P B - 20

- 20 — SLIDE LENGTH
- B — BLACK ANODIZE FINISH (BLANK IF CLEAR)
- P — POLYMER BALL BEARINGS (BLANK IF CRES BALL BEARINGS)
- E130QDT — SLIDE MODEL/SERIES

6 FOR REFERENCE PURPOSE ONLY, THESE SURFACES ALIGN WHEN SLIDE IS IN THE CLOSED POSITION.

PART NO.	SLIDE LENGTH	SLIDE TRAVEL	MOUNTING HOLE PATTERN							LOAD RATING PER PAIR (LBS)	SLIDE WEIGHT CRES BALLS (LBS)	SLIDE WEIGHT ACETAL BALLS (LBS)
			CABINET SECTION				CHASSIS SECTION					
SERIES - LENGTH	DIM. L	DIM. T	A	B	C	D	E	F	G			
E130QDT-10	10.00	10.00	-	-	5.000	8.000	-	5.000	7.500	129	.75	.69
E130QDT-11	11.00	11.00	-	-	6.000	9.000	2.000	6.000	8.500	129	.81	.76
E130QDT-12	12.00	12.00	-	-	6.000	10.000	2.000	6.000	9.500	138	.90	.82
E130QDT-13	13.00	13.00	-	-	7.000	11.000	3.000	7.000	10.500	138	.97	.89
E130QDT-14	14.00	14.00	-	-	7.000	12.000	3.000	8.000	11.500	132	1.04	.95
E130QDT-15	15.00	15.00	4.000	7.000	9.000	13.000	4.000	9.000	12.500	132	1.13	1.01
E130QDT-16	16.00	16.00	4.000	8.000	11.000	14.000	4.000	9.000	13.500	124	1.19	1.07
E130QDT-17	17.00	17.00	4.000	9.000	12.000	15.000	5.000	11.000	14.500	124	1.26	1.14
E130QDT-18	18.00	18.00	5.000	10.000	13.000	16.000	5.000	11.000	15.500	108	1.34	1.21
E130QDT-19	19.00	19.00	5.000	10.000	14.000	17.000	6.000	12.000	16.500	108	1.43	1.28
E130QDT-20	20.00	20.00	5.000	10.000	14.000	18.000	6.000	12.000	17.500	97	1.50	1.35
E130QDT-21	21.00	21.00	6.000	11.000	15.000	19.000	7.000	13.000	18.500	97	1.58	1.42
E130QDT-22	22.00	22.00	6.000	12.000	16.000	20.000	7.000	13.000	19.500	88	1.66	1.48
E130QDT-23	23.00	23.00	6.000	12.000	17.000	21.000	7.000	15.000	20.500	88	1.73	1.54
E130QDT-24	24.00	24.00	6.000	12.000	17.000	22.000	7.000	15.000	21.500	84	1.80	1.60
E130QDT-25	25.00	25.00	7.000	14.000	18.000	23.000	8.000	16.000	22.500	84	1.89	1.67
E130QDT-26	26.00	26.00	7.000	14.000	19.000	24.000	8.000	16.000	23.500	81	1.94	1.73
E130QDT-27	27.00	27.00	7.000	14.000	20.000	25.000	9.000	17.000	24.500	81	2.02	1.79
E130QDT-28	28.00	28.00	7.000	14.000	20.000	26.000	9.000	17.000	25.500	78	2.09	1.85

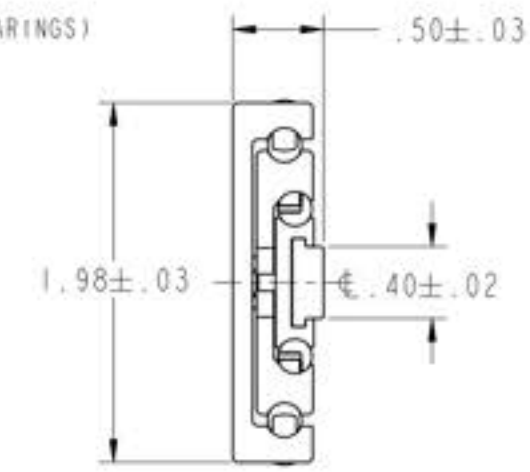

END VIEW

JONATHAN® Engineered Solutions

Irvine Technology Center
410 Exchange, Suite 200
Irvine, CA 92602
Tel. (714) 665-4400
Fax: (714) 368-7002
Website: www.jonathanengr.com
Engineer - Production - Integration/ Subassembly - Logistics
United States - Mexico - China - Taiwan

TOLERANCES UNLESS OTHERWISE NOTED

.XX	.XXX	ANGLES	HOLES
± .01	± .005	± 1°	± .005

PART NUMBER : E130QDT

DATE : 1/11

DESCRIPTION : ALUMINUM E130QDT LOAD RATING : 78-138 LBS.

SHEET 1 OF 1

COPYRIGHT © 2011 JONATHAN ENGINEERED SOLUTIONS

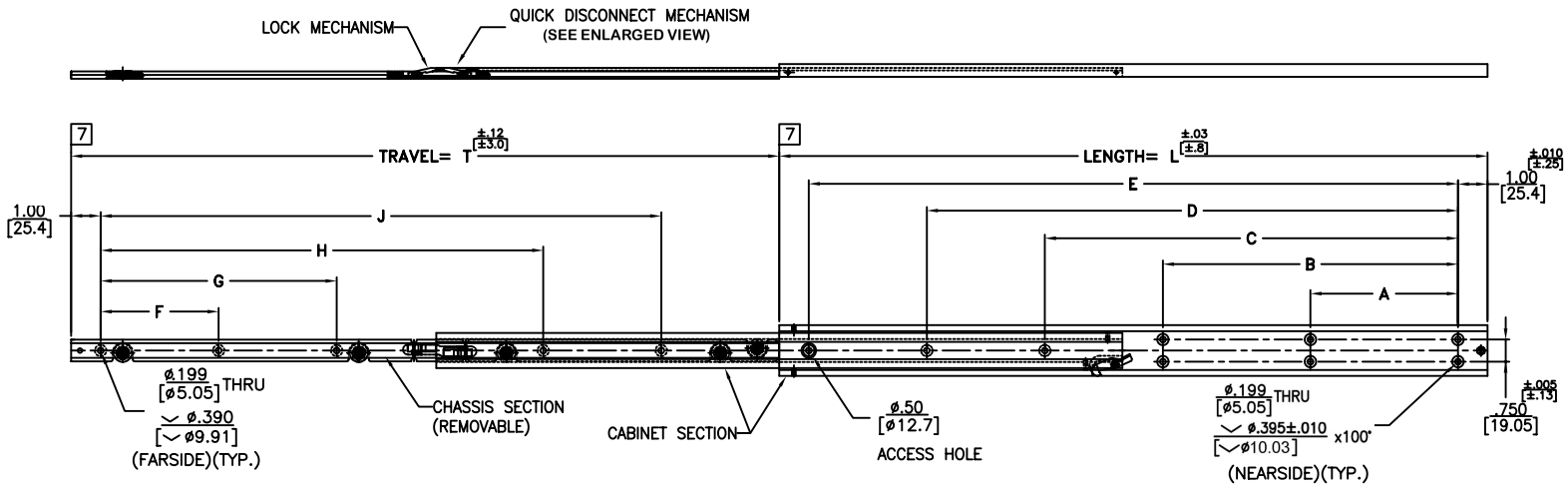

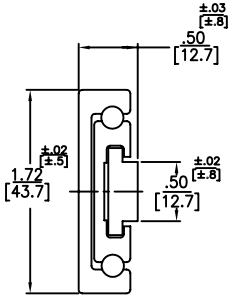

END VIEW

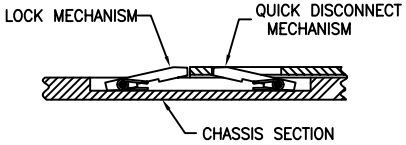

QUICK DISCONNECT MECHANISM

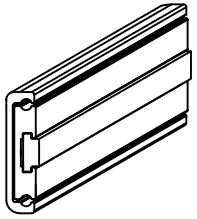

ISOMETRIC REPRESENTATION

5. USE #10 100 DEG. FLAT HEAD MACHINE SCREW FOR MOUNTING THRU SLIDE MEMBERS.
4. SLIDE LOCKS IN OPEN POSITION AND IS PROVIDED WITH QUICK DISCONNECT OF CHASSIS SECTION.
3. LEFT HAND SHOWN, RIGHT HAND OPPOSITE
2. FINISH: CHANNELS ARE ANODIZED PER MIL-A-8625 TYPE II, CLASS 1. CRES PARTS PASSIVATED PER MIL-S-5002.
1. MATERIAL: CHANNELS ARE FABRICATED FROM HIGH STRENGTH ALUMINUM ALLOYS. COMPONENT PARTS ARE 302 CRES. PER QQ-S-763 OR 303 CRES PER ASTM A582. BALLS ARE 440 CRES.

7. THESE SURFACES ALIGN WHEN SLIDE IS IN THE CLOSED POSITION.
6. CABINET SECTION OR CHASSIS SECTION MAY BE PURCHASED SEPARATELY AND ARE INTERCHANGEABLE.

PART NO.	SLIDE LENGTH	SLIDE TRAVEL	MOUNTING HOLE PATTERN									LOAD RATING	SLIDE WEIGHT (LBS.)
SERIES – LENGTH	DIM. L	DIM. T	CABINET SECTION A	B	C	D	E	CHASSIS SECTION F	G	H	J	PER PAIR	
131QD-10	10	10	3.000	–	–	5.000	8.000	3.000	–	–	6.000	130 LBS	.63
131QD-11	11	11	3.000	–	–	6.000	9.000	3.000	–	–	7.000	134 LBS	.69
131QD-12	12	12	3.000	–	–	7.000	10.000	3.000	–	–	8.000	138 LBS	.76
131QD-13	13	13	5.000	–	–	8.000	11.000	3.000	6.000	–	9.000	135 LBS	.82
131QD-14	14	14	5.000	–	–	9.000	12.000	3.000	7.000	–	10.000	132 LBS	.88
131QD-15	15	15	5.000	–	–	10.000	13.000	3.000	8.000	–	11.000	128 LBS	.95
131QD-16	16	16	5.000	–	8.000	11.000	14.000	3.000	6.000	9.000	12.000	124 LBS	1.01
131QD-17	17	17	5.000	–	9.000	12.000	15.000	3.000	6.000	10.000	13.000	116 LBS	1.07
131QD-18	18	18	5.000	–	10.000	13.000	16.000	3.000	6.000	11.000	14.000	108 LBS	1.13
131QD-19	19	19	5.000	–	11.000	14.000	17.000	3.000	6.000	12.000	15.000	102 LBS	1.20
131QD-20	20	20	4.000	8.000	10.000	14.000	18.000	4.000	8.000	12.000	16.000	97 LBS	1.26
131QD-21	21	21	4.000	8.000	11.000	15.000	19.000	4.000	8.000	12.000	16.000	94 LBS	1.32
131QD-22	22	22	4.000	8.000	12.000	16.000	20.000	4.000	8.000	13.000	17.000	88 LBS	1.39
131QD-23	23	23	4.000	8.000	13.000	17.000	21.000	4.000	8.000	14.000	18.000	86 LBS	1.45
131QD-24	24	24	5.000	10.000	14.000	18.000	22.000	4.000	8.000	15.000	19.000	84 LBS	1.51
131QD-25	25	25	5.000	10.000	15.000	19.000	23.000	4.000	8.000	16.000	20.000	83 LBS	1.58
131QD-26	26	26	5.000	10.000	14.000	19.000	24.000	5.000	10.000	16.000	21.000	81 LBS	1.64
131QD-27	27	27	5.000	10.000	15.000	20.000	25.000	5.000	10.000	17.000	22.000	80 LBS	1.70
131QD-28	28	28	5.000	10.000	16.000	21.000	26.000	5.000	10.000	18.000	23.000	78 LBS	1.76

JONATHAN® Engineered Solutions

Irvine Technology Center
410 Exchange, Suite 200
Irvine, CA 92602
Tel: (714) 665-4400
Website: www.jonathanengr.com
Engineering • Production • Integration/Subassembly • Logistics
United States • Mexico • China • Taiwan

DIMENSIONS SHOWN AS: IN. [MM]

TOLERANCE UNLESS OTHERWISE NOTED

.XX / .X	±.010 [±.25]
.XXX / .XX	±.005 [±.13]
ANGLES	±1°

SERIES: 131QD

DATE: 1/11

DESCRIPTION:

ALUMINUM
SERIES 131QD
LOAD RATING: 80-130 LBS.

COPYRIGHT © 2011 JONATHAN ENGINEERED SOLUTIONS

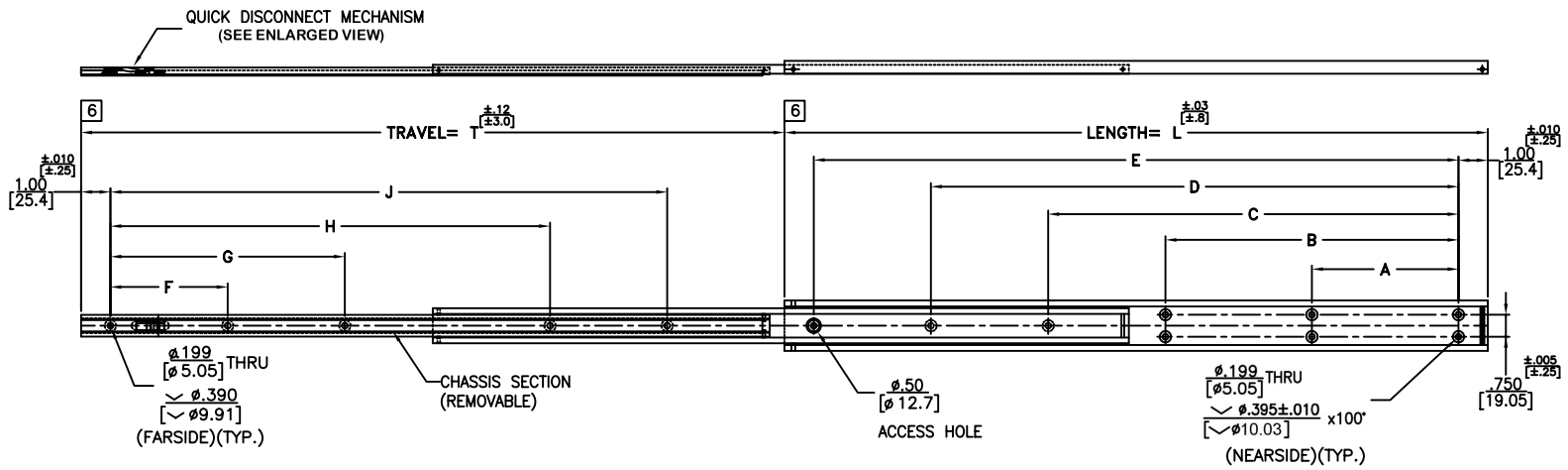

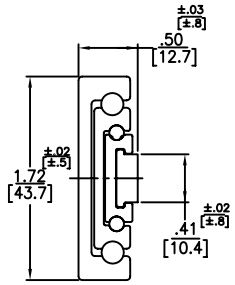

END VIEW

3. SLIDE IS SYMMETRICAL, MAY BE USED AS LEFT OR RIGHT HAND SLIDE.
2. FINISH: CHANNELS ARE ANODIZED PER MIL–A–8625 TYPE II, CLASS 1. CRES PARTS PASSIVATED PER MIL–S–5002.
1. MATERIAL: CHANNELS ARE FABRICATED FROM HIGH STRENGTH ALUMINUM ALLOYS. COMPONENT PARTS ARE 302 CRES. PER QQ–S–763 OR 303 CRES PER ASTM A582. BALLS ARE 440 CRES.

6. THESE SURFACES ALIGN WHEN SLIDE IS IN THE CLOSED POSITION.
5. USE #10 100 DEG. FLAT HEAD MACHINE SCREW FOR MOUNTING THRU SLIDE MEMBERS.
4. SLIDE FEATURES QUICK DISCONNECT OF CHASSIS SECTION.

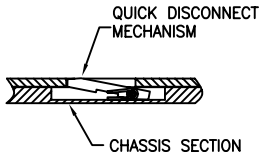

QUICK DISCONNECT MECHANISM

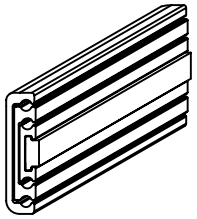

ISOMETRIC REPRESENTATION

PART NO. SERIES – LENGTH	SLIDE LENGTH DIM. L	SLIDE TRAVEL DIM. T	MOUNTING HOLE PATTERN CABINET SECTION A	B	C	D	E	CHASSIS SECTION F	G	H	J	LOAD RATING PER PAIR	SLIDE WEIGHT (LBS.)
131QDT–10	10	10	3.000	–	–	5.000	8.000	3.000	–	–	6.000	130 LBS	.60
131QDT–11	11	11	3.000	–	–	6.000	9.000	3.000	–	–	7.000	134 LBS	.65
131QDT–12	12	12	3.000	–	–	7.000	10.000	3.000	–	–	8.000	138 LBS	.71
131QDT–13	13	13	5.000	–	–	8.000	11.000	3.000	6.000	–	9.000	135 LBS	.77
131QDT–14	14	14	5.000	–	–	9.000	12.000	3.000	7.000	–	10.000	132 LBS	.83
131QDT–15	15	15	5.000	–	–	10.000	13.000	3.000	8.000	–	11.000	128 LBS	.89
131QDT–16	16	16	5.000	–	8.000	11.000	14.000	3.000	6.000	9.000	12.000	124 LBS	.95
131QDT–17	17	17	5.000	–	9.000	12.000	15.000	3.000	6.000	10.000	13.000	116 LBS	1.01
131QDT–18	18	18	5.000	–	10.000	13.000	16.000	3.000	6.000	11.000	14.000	108 LBS	1.07
131QDT–19	19	19	5.000	–	11.000	14.000	17.000	3.000	6.000	12.000	15.000	102 LBS	1.13
131QDT–20	20	20	4.000	8.000	10.000	14.000	18.000	4.000	8.000	12.000	16.000	97 LBS	1.19
131QDT–21	21	21	4.000	8.000	11.000	15.000	19.000	4.000	8.000	12.000	16.000	94 LBS	1.25
131QDT–22	22	22	4.000	8.000	12.000	16.000	20.000	4.000	8.000	13.000	17.000	88 LBS	1.31
131QDT–23	23	23	4.000	8.000	13.000	17.000	21.000	4.000	8.000	14.000	18.000	86 LBS	1.37
131QDT–24	24	24	5.000	10.000	14.000	18.000	22.000	4.000	8.000	15.000	19.000	84 LBS	1.43
131QDT–25	25	25	5.000	10.000	15.000	19.000	23.000	4.000	8.000	16.000	20.000	83 LBS	1.49
131QDT–26	26	26	5.000	10.000	14.000	19.000	24.000	5.000	10.000	16.000	21.000	81 LBS	1.55
131QDT–27	27	27	5.000	10.000	15.000	20.000	25.000	5.000	10.000	17.000	22.000	80 LBS	1.61
131QDT–28	28	28	5.000	10.000	16.000	21.000	26.000	5.000	10.000	18.000	23.000	78 LBS	1.67

JONATHAN® Engineered Solutions

Irvine Technology Center
410 Exchange, Suite 200
Irvine, CA 92602
Tel: (714) 665–4400
Website: www.jonathanengr.com
Engineering • Production • Integration/Subassembly • Logistics
United States • Mexico • China • Taiwan

DIMENSIONS SHOWN AS: IN. [MM]

TOLERANCE UNLESS OTHERWISE NOTED

.XX / .X	±.010 [±.25]
.XXX / .XX	±.005 [±.13]
ANGLES	±1°

SERIES: 131QDT

DATE: 1/11

DESCRIPTION:

ALUMINUM
SERIES 131QDT
LOAD RATING: 80–130 LBS.

COPYRIGHT © 2011 JONATHAN ENGINEERED SOLUTIONS

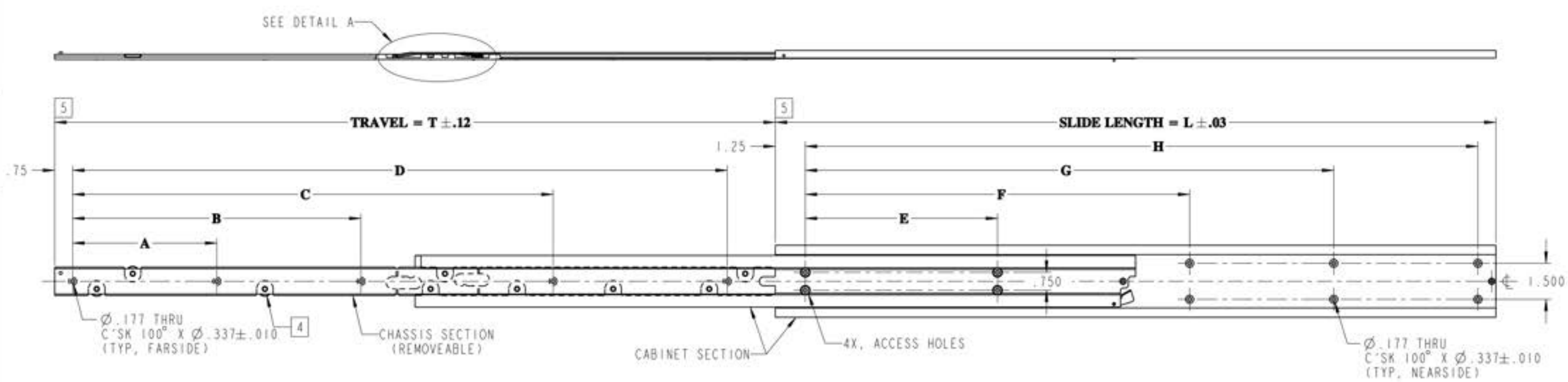

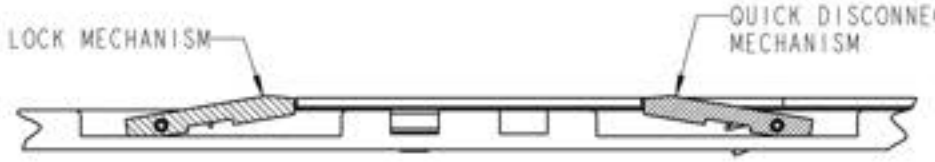

DETAIL A

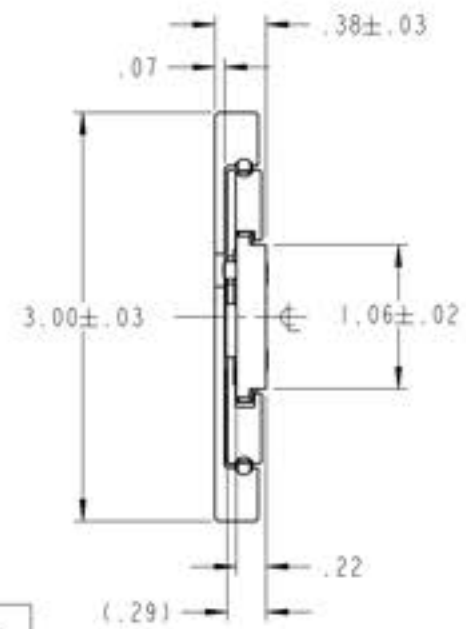

END VIEW

8. LEFT HAND SLIDE SHOWN. RIGHT HAND SLIDE OPPOSITE.

7. USE #8 100° FLAT HEAD MACHINE SCREWS FOR MOUNTING THRU THE SLIDE MEMBERS.

6. CABINET SECTION OR CHASSIS SECTION MAY BE PURCHASED SEPARATELY AND ARE INTERCHANGEABLE.

5 FOR REFERENCE PURPOSE ONLY, THESE SURFACES TO ALIGN WHEN SLIDE IS IN CLOSED POSITION.

4 AMOUNT AND LOCATION OF BALL BEARING ROLLERS DETERMINED BY JONATHAN ENGINEERED SOLUTIONS.

3. SLIDE LOCKS IN FULL OPEN POSITION AND IS PROVIDED WITH QUICK DISCONNECT OF CHASSIS SECTION.

2. FINISH: SLIDE CHANNELS AND ALUMINUM COMPONENTS ARE ANODIZED PER MIL-A-8625, TYPE II, CLASS I. CRES COMPONENTS ARE PASSIVATED PER SAE-AMS-QQ-P-35.

1. MATERIAL: SLIDE CHANNELS ARE FABRICATED FROM ALUMINUM ALLOY 7075-T6. COMPONENT PARTS ARE 302/303 CRES AND HIGH STRENGTH ALUMINUM. BALL BEARINGS ARE 440 CRES.

PART NO.	SLIDE LENGTH	SLIDE TRAVEL	CHASSIS SECTION				CABINET SECTION				LOAD RATING - PER PAIR
SERIES - LENGTH	L	T	A	B	C	D	E	F	G	H	
138QD-10	10.00	10.00	2.750	-	-	7.625	-	-	5.000	8.000	170 LBS
138QD-12	12.00	12.00	3.750	-	-	9.500	-	-	6.000	10.000	181 LBS
138QD-14	14.00	14.00	4.000	-	9.750	11.250	-	-	7.000	12.000	174 LBS
138QD-16	16.00	16.00	4.500	-	11.000	13.250	4.000	8.000	11.000	14.000	162 LBS
138QD-18	18.00	18.00	5.500	-	12.000	15.250	5.000	10.000	13.000	16.000	154 LBS
138QD-20	20.00	20.00	4.000	7.000	14.000	17.250	5.000	10.000	14.000	18.000	147 LBS
138QD-22	22.00	22.00	4.000	8.000	15.000	19.250	6.000	12.000	16.000	20.000	140 LBS
138QD-24	24.00	24.00	5.000	9.000	16.500	21.250	6.000	12.000	17.000	22.000	134 LBS
138QD-26	26.00	26.00	5.500	9.500	17.500	23.250	7.000	14.000	19.000	24.000	130 LBS
138QD-28	28.00	28.00	5.500	10.000	18.750	25.250	7.000	14.000	20.000	26.000	128 LBS
138QD-30	30.00	30.00	6.000	12.000	20.000	27.250	8.000	16.000	22.000	28.000	116 LBS

JONATHAN® Engineered Solutions

Irvine Technology Center
410 Exchange, Suite 200
Irvine, CA 92602
Tel. (714) 665-4400
Fax: (714) 368-7002
Website: www.jonathanengr.com
Engineer - Production - Integration/ Subassembly - Logistics
United States - Mexico - China - Taiwan

TOLERANCES UNLESS OTHERWISE NOTED				PART NUMBER :	DESCRIPTION :
.XX	.XXX	ANGLES	HOLES	138QD	ALUMINUM SERIES 138QD LOAD RATING : 116-170 LBS.
± .01	± .005	± 1°	± .005	DATE : 1/11	
SHEET 1 OF 1					

COPYRIGHT © 2011 JONATHAN ENGINEERED SOLUTIONS

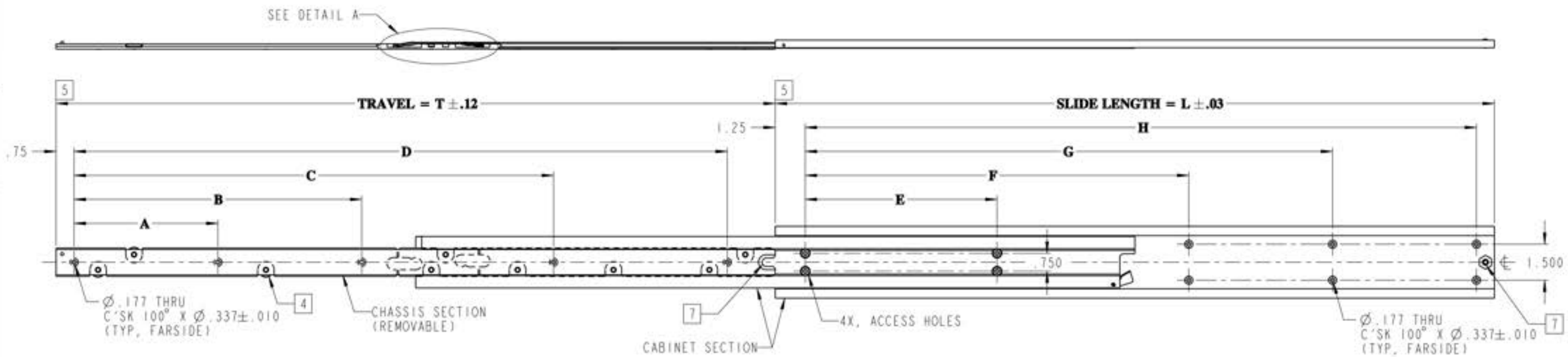

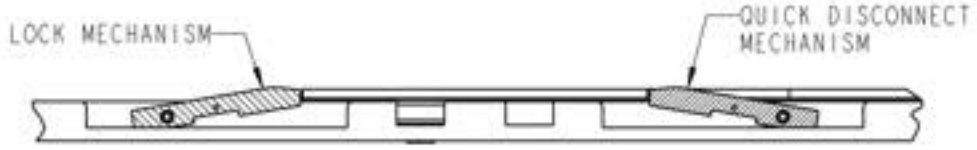

DETAIL A

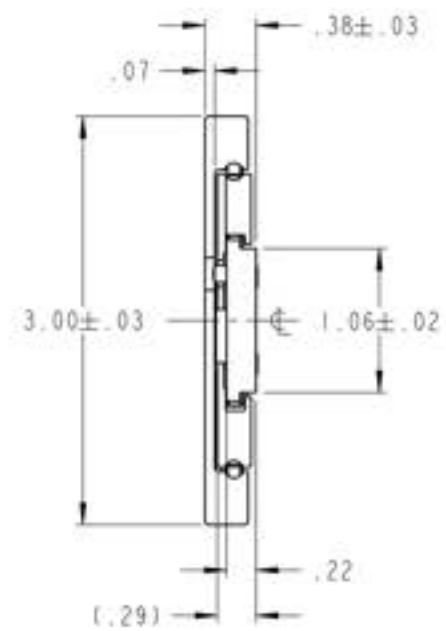

END VIEW

9. LEFT HAND SLIDE SHOWN, RIGHT HAND SLIDE OPPOSITE.

8. USE #8 100° FLAT HEAD MACHINE SCREWS FOR MOUNTING THRU THE SLIDE MEMBERS.

[7] SLIDE FEATURES AN ADJUSTABLE REAR SHOCKBLOCK.

6. CABINET SECTION OR CHASSIS SECTION MAY BE PURCHASED SEPARATELY AND ARE INTERCHANGEABLE.

[5] FOR REFERENCE PURPOSE ONLY, THESE SURFACES TO ALIGN WHEN SLIDE IS IN CLOSED POSITION.

[4] AMOUNT AND LOCATION OF BALL BEARING ROLLERS DETERMINED BY JONATHAN ENGINEERED SOLUTIONS.

3. SLIDE LOCKS IN FULL OPEN POSITION AND IS PROVIDED WITH QUICK DISCONNECT OF CHASSIS SECTION.

2. FINISH: SLIDE CHANNELS AND ALUMINUM COMPONENTS ARE ANODIZED PER MIL-A-8625, TYPE II, CLASS I. CRES COMPONENTS ARE PASSIVATED PER SAE-AMS-QQ-P-35.

1. MATERIAL: SLIDE CHANNELS ARE FABRICATED FROM ALUMINUM ALLOY 7075-T6. COMPONENT PARTS ARE 302/303 CRES AND HIGH STRENGTH ALUMINUM. BALL BEARINGS ARE 440 CRES.

PART NO.	SLIDE LENGTH	SLIDE TRAVEL	CHASSIS SECTION				CABINET SECTION				LOAD RATING
SERIES - LENGTH	L	T	A	B	C	D	E	F	G	H	PER PAIR
138QDA-10	10.00	10.00	2.750	-	-	7.625	-	-	5.000	8.000	170 LBS
138QDA-12	12.00	12.00	3.750	-	-	9.500	-	-	6.000	10.000	181 LBS
138QDA-14	14.00	14.00	4.000	-	9.750	11.250	-	-	7.000	12.000	174 LBS
138QDA-16	16.00	16.00	4.500	-	11.000	13.250	4.000	8.000	11.000	14.000	162 LBS
138QDA-18	18.00	18.00	5.500	-	12.000	15.250	5.000	10.000	13.000	16.000	154 LBS
138QDA-20	20.00	20.00	4.000	7.000	14.000	17.250	5.000	10.000	14.000	18.000	147 LBS
138QDA-22	22.00	22.00	4.000	8.000	15.000	19.250	6.000	12.000	16.000	20.000	140 LBS
138QDA-24	24.00	24.00	5.000	9.000	16.500	21.250	6.000	12.000	17.000	22.000	134 LBS
138QDA-26	26.00	26.00	5.500	9.500	17.500	23.250	7.000	14.000	19.000	24.000	130 LBS
138QDA-28	28.00	28.00	5.500	10.000	18.750	25.250	7.000	14.000	20.000	26.000	128 LBS
138QDA-30	30.00	30.00	6.000	12.000	20.000	27.250	8.000	16.000	22.000	28.000	116 LBS

JONATHAN® Engineered Solutions

Irvine Technology Center
410 Exchange, Suite 200
Irvine, CA 92602
Tel. (714) 665-4400
Fax: (714) 368-7002
Website: www.jonathanengr.com
Engineer - Production - Integration/ Subassembly - Logistics
United States - Mexico - China - Taiwan

TOLERANCES UNLESS OTHERWISE NOTED				PART NUMBER :	DESCRIPTION :
				138QDA	ALUMINUM SERIES 138QDA LOAD RATING : 116-170 LBS.
.XX	.XXX	ANGLES	HOLES	DATE :	
± .01	± .005	± 1°	± .005	1/11	
SHEET 1 OF 1					

COPYRIGHT © 2011 JONATHAN ENGINEERED SOLUTIONS

NOTES:

1. LEFT SLIDE AS SHOWN, RIGHT SLIDE OPPOSITE.
2. FOR BRACKETS, SEE BRACKETRY SECTION.
3. CABINET SECTION OR CHASSIS SECTION MAY BE PURCHASED SEPARATELY AND ARE INTERCHANGEABLE. CONTACT JONATHAN FOR ORDERING INSTRUCTIONS.
4. AMOUNT OF ROLLERS TO BE DETERMINED BY JONATHAN ENGINEERED SOLUTIONS.
5. SLIDE LOCKS IN OPEN POSITION ONLY.
6. SLIDE FEATURES QUICK DISCONNECT OF CHASSIS SECTION.

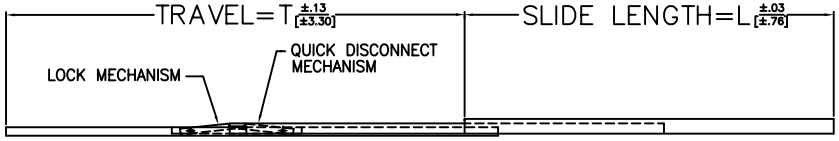

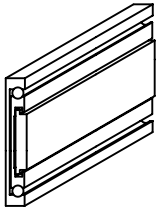

ISOMETRIC REPRESENTATION

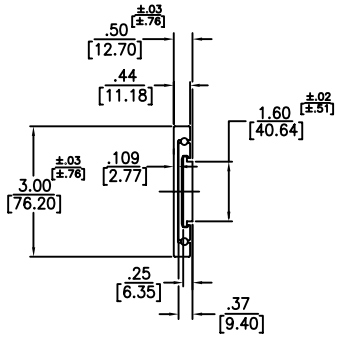

END VIEW

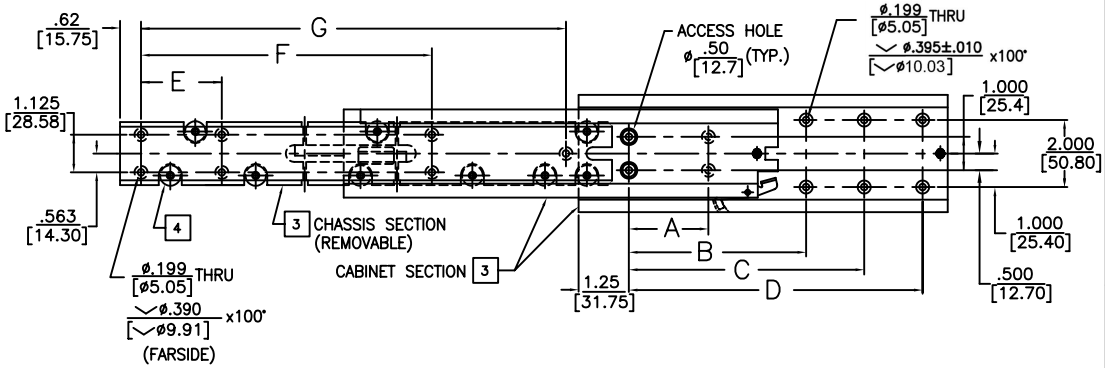

PART NO.	SLIDE LENGTH	SLIDE TRAVEL	MOUNTING HOLE PATTERN							LOAD RATING
SERIES – LENGTH	DIM. L	DIM. T	OUTER MEMBER A	B	C	D	CHASSIS SECTION E	F	G	PER PAIR
145QD–10	10 / 254	9 / 228.6			5 / 127	8 / 203.2		6 / 152.4	8 / 203.2	188 LBS / 85 KG
145QD–12	12 / 304.8	11 / 279.4			6 / 152.4	10 / 254		7 / 177.8	10 / 254	181 LBS / 82 KG
145QD–14	14 / 355.6	13 / 330.2			7 / 177.8	12 / 304.8	4 / 101.6	8 / 203.2	12 / 304.8	174 LBS / 78 KG
145QD–16	16 / 406.4	15 / 381	4 / 101.6	8 / 203.2	11 / 279.4	14 / 355.6	4 / 101.6	9 / 228.6	14 / 355.6	162 LBS / 73 KG
145QD–18	18 / 457.2	17 / 431.8	5 / 127	10 / 254	13 / 330.2	16 / 406.4	5 / 127	10 / 254	16 / 406.4	154 LBS / 69 KG
145QD–20	20 / 508	19 / 482.6	5 / 127	10 / 254	14 / 355.6	18 / 457.2	4 / 101.6	12 / 304.8	18 / 457.2	147 LBS / 66 KG
145QD–22	22 / 558.8	21 / 533.4	6 / 152.4	12 / 304.8	16 / 406.4	20 / 508	7 / 177.8	14 / 355.6	20 / 508	140 LBS / 63 KG
145QD–24	24 / 609.6	23 / 584.2	6 / 152.4	12 / 304.8	17 / 431.8	22 / 558.8	8 / 203.2	15 / 381	22 / 558.8	134 LBS / 60 KG
145QD–26	26 / 660.4	25 / 635	7 / 177.8	14 / 355.6	19 / 482.6	24 / 609.6	8 / 203.2	16 / 406.4	24 / 609.6	130 LBS / 58 KG
145QD–28	28 / 711.2	27 / 685.8	7 / 177.8	14 / 355.6	20 / 508	26 / 660.4	9 / 228.6	18 / 457.2	26 / 660.4	128 LBS / 58 KG

JONATHAN® Engineered Solutions
Irvine Technology Center
410 Exchange, Suite 200
Irvine, CA 92602
Tel: (714) 665–4400
Website: www.JonathanEngr.com
Engineering • Production • Integration/Subassembly • Logistics
United States • Mexico • China • Taiwan

DIMENSIONS SHOWN AS: IN. / [MM]	TOLERANCE UNLESS OTHERWISE NOTED
.XX / .X	±.010 / [±.3]
.XXX / .XX	±.005 / [±.13]
ANGLES	±1°

SERIES: 145QD

DATE: 1/11

DESCRIPTION:
ALUMINUM
SERIES 145QD
LOAD RATING: 128–188 LBS./ 58–85 KG.

COPYRIGHT © 2011 JONATHAN ENGINEERED SOLUTIONS

NOTES:

1. LEFT SLIDE AS SHOWN, RIGHT SLIDE OPPOSITE.
2. FOR MOUNTING BRACKETS, SEE BRACKETRY SECTION.
3. CABINET SECTION AND CHASSIS SECTION MAY BE PURCHASED SEPARATELY AND ARE INTERCHANGEABLE, CONTACT JONATHAN FOR ORDERING INFORMATION.
4. AMOUNT AND LOCATION OF ROLLERS TO BE DETERMINED BY JONATHAN.
5. SLIDE LOCKS IN OPEN POSITION ONLY.
6. SLIDE FEATURES QUICK DISCONNECT OF CHASSIS SECTION.
7. SLIDE FEATURES AN ADJUSTABLE REAR SHOCKBLOCK.

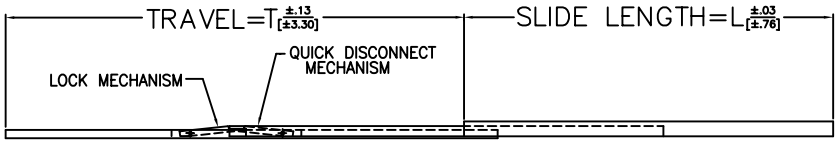

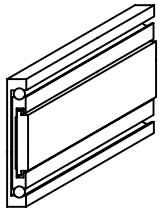

ISOMETRIC REPRESENTATION

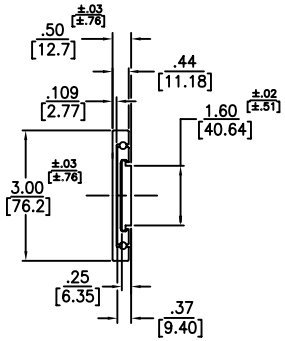

END VIEW

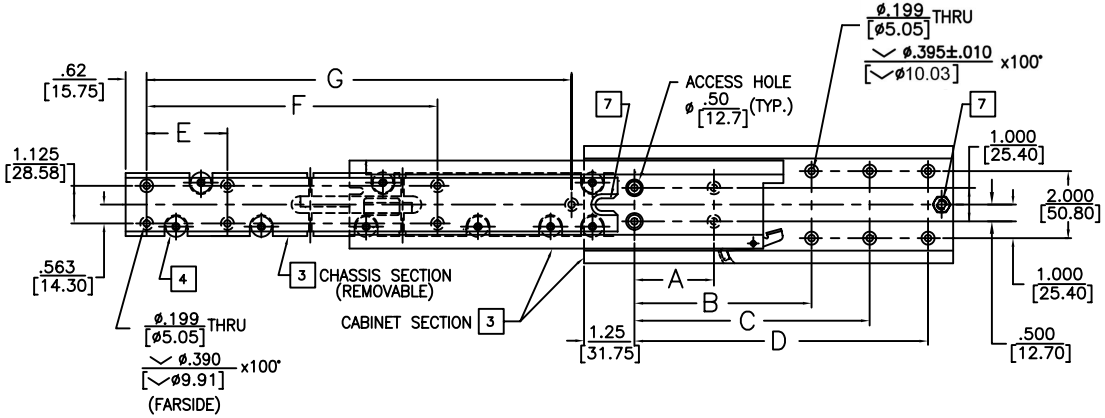

PART NUMBER	SLIDE LENGTH	SLIDE TRAVEL	MOUNTING HOLE PATTERN							LOAD RATING
SERIES – LENGTH	DIM. L	DIM. T	OUTER MEMBER A	B	C	D	CHASSIS SECTION E	F	G	PER PAIR
145QDA–10	10 / 254	9 / 228.6			5 / 127	8 / 203.2		6 / 152.4	8 / 203.2	188 LBS / 85 KG
145QDA–12	12 / 304.8	11 / 279.4			6 / 152.4	10 / 254		7 / 177.8	10 / 254	181 LBS / 82 KG
145QDA–14	14 / 355.6	13 / 330.2			7 / 177.8	12 / 304.8	4 / 101.6	8 / 203.2	12 / 304.8	174 LBS / 78 KG
145QDA–16	16 / 406.4	15 / 381	4 / 101.6	8 / 203.2	11 / 279.4	14 / 355.6	4 / 101.6	9 / 228.6	14 / 355.6	162 LBS / 73 KG
145QDA–18	18 / 457.2	17 / 431.8	5 / 127	10 / 254	13 / 330.2	16 / 406.4	5 / 127	10 / 254	16 / 406.4	154 LBS / 69 KG
145QDA–20	20 / 508	19 / 482.6	5 / 127	10 / 254	14 / 355.6	18 / 457.2	4 / 101.6	12 / 304.8	18 / 457.2	147 LBS / 66 KG
145QDA–22	22 / 558.8	21 / 533.4	6 / 152.4	12 / 304.8	16 / 406.4	20 / 508	7 / 177.8	14 / 355.6	20 / 508	140 LBS / 63 KG
145QDA–24	24 / 609.6	23 / 584.2	6 / 152.4	12 / 304.8	17 / 431.8	22 / 558.8	8 / 203.2	15 / 381	22 / 558.8	134 LBS / 60 KG
145QDA–26	26 / 660.4	25 / 635	7 / 177.8	14 / 355.6	19 / 482.6	24 / 609.6	8 / 203.2	16 / 406.4	24 / 609.6	130 LBS / 58 KG
145QDA–28	28 / 711.2	27 / 685.8	7 / 177.8	14 / 355.6	20 / 508	26 / 660.4	9 / 228.6	18 / 457.2	26 / 660.4	128 LBS / 58 KG

JONATHAN® Engineered Solutions

Irvine Technology Center
410 Exchange, Suite 200
Irvine, CA 92602
Tel: (714) 665–4400
Website: www.JonathanEngr.com
Engineering • Production • Integration/Subassembly • Logistics
United States • Mexico • China • Taiwan

DIMENSIONS SHOWN AS: IN. [MM] TOLERANCE UNLESS OTHERWISE NOTED	
.XX / .X	±.010 [±.3]
.XXX / .XX	±.005 [±.13]
ANGLES	±1°

SERIES: 145QDA

DATE: 1/11

DESCRIPTION:

ALUMINUM
SERIES 145QDA
LOAD RATING: 128–188 LBS./ 58–85 KG.

COPYRIGHT © 2011 JONATHAN ENGINEERED SOLUTIONS

NOTES:

1. LEFT SLIDE AS SHOWN, RIGHT SLIDE OPPOSITE.
2. SLIDE LOCKS IN OPEN POSITION ONLY.
3. FOR BRACKETS, SEE BRACKETRY SECTION.
4. SLIDE FEATURES QUICK DISCONNECT OF CHASSIS SECTION AND 90° PIVOT POSITION. ALSO AVAILABLE WITH ±45° PIVOT.

[5] CABINET SECTION OR CHASSIS SECTION MAY BE PURCHASED SEPARATELY AND ARE INTERCHANGEABLE. CONTACT JONATHAN FOR ORDERING INSTRUCTIONS.

[6] ALL MEMBERS FLUSH AT REAR OF SLIDE IN CLOSED POSITION.

[7] AMOUNT OF ROLLERS TO BE DETERMINED BY JONATHAN ENGINEERED SOLUTIONS.

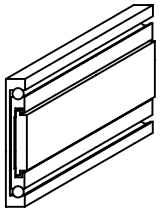

ISOMETRIC REPRESENTATION

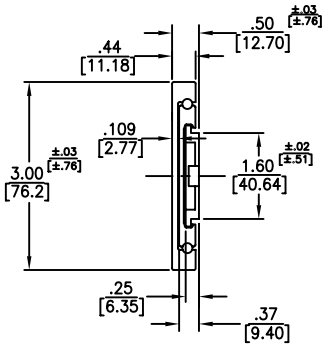

END VIEW

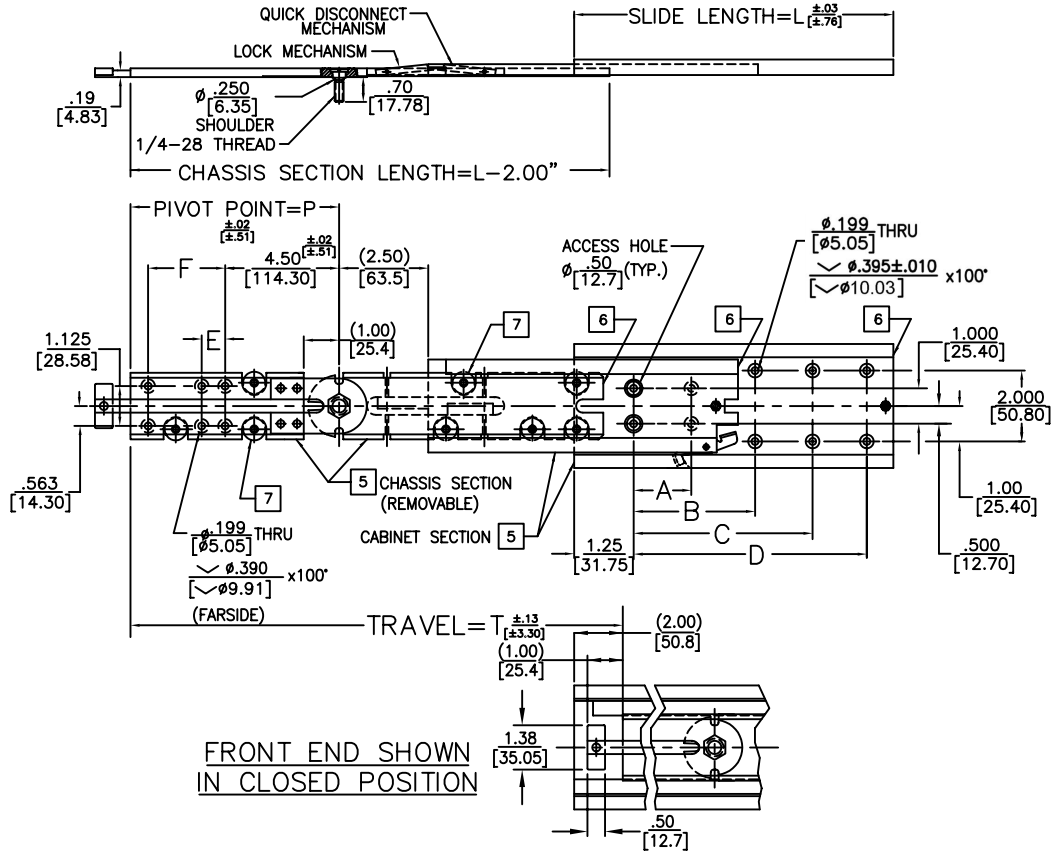

FRONT END SHOWN IN CLOSED POSITION

PART NO.	SLIDE LENGTH	SLIDE TRAVEL	PIVOT POINT	MOUNTING HOLE PATTERN						LOAD RATING
SERIES LENGTH	DIM. L	DIM. T	DIM. P	OUTER MEMBER A	B	C	D	PIVOT E	PLATE F	PER PAIR
145QDP-14	14 / 355.6	15 / 381	5 / 127			8 / 203.2	12 / 304.8			160 LBS / 72 KG
145QDP-16	16 / 406.4	17 / 431.8	6 / 152.4	4 / 101.6	9 / 228.6	11 / 279.4	14 / 355.6		1 / 25.4	152 LBS / 68 KG
145QDP-18	18 / 457.2	19 / 482.6	7 / 177.8	5 / 127	10 / 254	13 / 330.2	16 / 406.4		2 / 50.8	142 LBS / 64 KG
145QDP-20	20 / 508	21 / 533.4	8 / 203.2	5 / 127	11 / 279.4	14 / 355.6	18 / 457.2		3 / 76.2	134 LBS / 60 KG
145QDP-22	22 / 558.8	23 / 584.2	9 / 228.6	6 / 152.4	12 / 304.8	16 / 406.4	20 / 508	2 / 50.8	4 / 101.6	128 LBS / 58 KG
145QDP-24	24 / 609.6	25 / 635	10 / 254	6 / 152.4	13 / 330.2	17 / 431.8	22 / 558.8	2.5 / 63.5	5 / 127	122 LBS / 55 KG
145QDP-26	26 / 660.4	27 / 685.8	11 / 279.4	7 / 177.8	14 / 355.6	19 / 482.6	24 / 609.6	3 / 76.2	6 / 152.4	118 LBS / 53 KG
145QDP-28	28 / 711.2	29 / 736.6	12 / 304.8	7 / 177.8	15 / 381	20 / 508	26 / 660.4	3.5 / 88.9	7 / 177.8	111 LBS / 50 KG
145QDP-30	30 / 762	31 / 787.4	13 / 330.2	8 / 203.2	16 / 406.4	22 / 558.8	28 / 711.2	4 / 101.6	8 / 203.2	105 LBS / 47 KG
145QDP-32	32 / 812.8	33 / 838.2	14 / 355.6	8 / 203.2	17 / 431.8	23 / 584.2	30 / 762	4.5 / 114.3	9 / 228.6	100 LBS / 45 KG
145QDP-34	34 / 863.6	35 / 889	15 / 381	9 / 228.6	18 / 457.2	25 / 635	32 / 812.8	5 / 127	10 / 254	94 LBS / 42 KG
145QDP-36	36 / 914.4	37 / 939.8	16 / 406.4	9 / 228.6	19 / 482.6	26 / 660.4	34 / 863.6	5.5 / 139.7	11 / 279.4	89 LBS / 40 KG

JONATHAN® Engineered Solutions
Irvine Technology Center
410 Exchange, Suite 200
Irvine, CA 92602
Tel: (714) 665-4400
Website: www.JonathanEngr.com
Engineering • Production • Integration/Subassembly • Logistics
United States • Mexico • China • Taiwan

DIMENSIONS SHOWN AS: IN. / [MM] TOLERANCE UNLESS OTHERWISE NOTED	
.XX / .X	±.010 [±.3]
.XXX / .XX	±.005 [±.13]
ANGLES	±1°

SERIES: 145QDP

DATE: 1/11

DESCRIPTION:

ALUMINUM
SERIES 145QDP
LOAD RATING: 89-160 LBS./ 40-72 KG.

COPYRIGHT © 2011 JONATHAN ENGINEERED SOLUTIONS

NOTES:

1. WHEN ORDERING WITH LOCK, SPECIFY L.H. OR R.H.
   (EX: 150L–12L, 150L–12R)
   (LEFT SLIDE AS SHOWN, RIGHT SLIDE OPPOSITE.)
2. FOR BRACKETS, SEE BRACKETRY SECTION.
3. SLIDE CAN BE PROVIDED WITH LOCK TYPE "E". LOCKS IN OPEN POSITION ONLY. (OPTIONAL). "L" IS THE PART NO. MODIFIER.

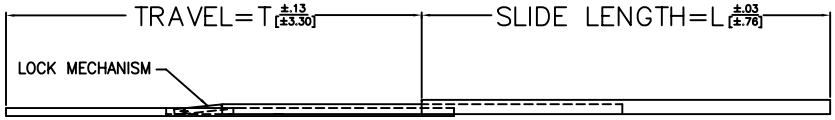

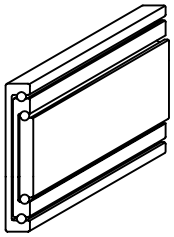

ISOMETRIC REPRESENTATION

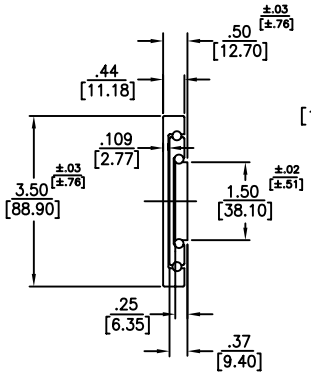

END VIEW

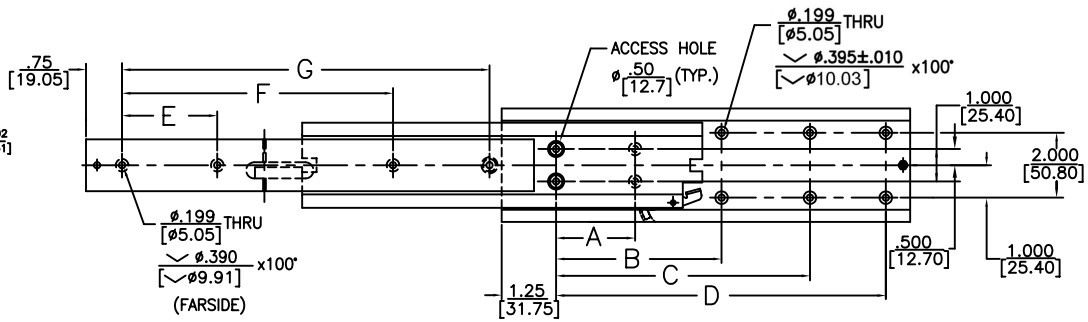

PART NO.	SLIDE LENGTH	SLIDE TRAVEL	MOUNTING HOLE PATTERN							LOAD RATING
SERIES – LENGTH	DIM. L	DIM. T	OUTER MEMBER A	OUTER MEMBER B	OUTER MEMBER C	OUTER MEMBER D	INNER MEMBER E	INNER MEMBER F	INNER MEMBER G	PER PAIR
150–10	10	9			5	8		5	8	240 LBS
150L–10	254	228.6			127	203.2		127	203.2	108 KG
150–12	12	11			6	10	2	6	10	265 LBS
150L–12	304.8	279.4			152.4	254	50.8	152.4	254	120 KG
150–14	14	13			7	12	3	8	12	260 LBS
150L–14	355.6	330.2			177.8	304.8	76.2	203.2	304.8	117 KG
150–16	16	15	4	8	11	14	4	9	14	241 LBS
150L–16	406.4	381	101.6	203.2	279.4	355.6	101.6	228.6	355.6	109 KG
150–18	18	17	5	10	13	16	5	11	16	214 LBS
150L–18	457.2	431.8	127	254	330.2	406.4	127	279.4	406.4	97 KG
150–20	20	19	5	10	14	18	6	12	18	198 LBS
150L–20	508	482.6	127	254	355.6	457.2	152.4	304.8	457.2	89 KG
150–22	22	21	6	12	16	20	7	13	20	183 LBS
150L–22	558.8	533.4	152.4	304.8	406.4	508	177.8	330.2	508	83 KG
150–24	24	23	6	12	17	22	7	15	22	171 LBS
150L–24	609.6	584.2	152.4	304.8	431.8	558.8	177.8	381	558.8	77 KG
150–26	26	25	7	14	19	24	8	16	24	163 LBS
150L–26	660.4	635	177.8	355.6	482.6	609.6	203.2	406.4	609.6	73 KG
150–28	28	27	7	14	20	26	9	17	26	156 LBS
150L–28	711.2	685.8	177.8	355.6	508	660.4	228.6	431.8	660.4	70 KG
150–30	30	29	8	16	22	28	9	19	28	150 LBS
150L–30	762	736.6	203.2	406.4	558.8	711.2	228.6	482.6	711.2	68 KG
150–32	32	31	8	16	23	30	10	20	30	146 LBS
150L–32	812.8	787.4	203.2	406.4	584.2	762	254	508	762	66 KG
150–34	34	33	9	18	25	32	11	21	32	142 LBS
150L–34	863.6	838.2	228.6	457.2	635	812.8	279.4	533.4	812.8	64 KG
150–36	36	35	9	18	26	34	11	23	34	136 LBS
150L–36	914.4	889	228.6	457.2	660.4	863.6	279.4	584.2	863.6	61 KG

JONATHAN® Engineered Solutions

Irvine Technology Center
410 Exchange, Suite 200
Irvine, CA 92602
Tel: (714) 665–4400
Website: www.JonathanEngr.com
Engineering • Production • Integration/Subassembly • Logistics
United States • Mexico • China • Taiwan

DIMENSIONS SHOWN AS: IN. / [MM]	TOLERANCE UNLESS OTHERWISE NOTED
.XX / .X	±.010 [±.3]
.XXX / .XX	±.005 [±.13]
ANGLES	±1°

SERIES: 150

DATE: 1/11

DESCRIPTION:
ALUMINUM
SERIES 150
LOAD RATING: 136–265 LBS./ 61–120 KG.

COPYRIGHT © 2011 JONATHAN ENGINEERED SOLUTIONS

NOTES:

1. LEFT SLIDE AS SHOWN, RIGHT SLIDE OPPOSITE.
2. FOR BRACKETS, SEE BRACKETRY SECTION.
3. CABINET SECTION OR CHASSIS SECTION MAY BE PURCHASED SEPARATELY AND ARE INTERCHANGEABLE. CONTACT JONATHAN FOR ORDERING INSTRUCTIONS.
4. AMOUNT OF ROLLERS TO BE DETERMINED BY JONATHAN ENGINEERED SOLUTIONS.
5. SLIDE LOCKS IN OPEN POSITION ONLY.
6. SLIDE FEATURES QUICK DISCONNECT OF CHASSIS SECTION.
7. MOUNTING HOLE TOLERANCE
8. DYNARACE IS A STAINLESS STEEL STRIP INSERTED INTO THE OUTER CHANNEL RACEWAY FOR IMPROVED CYCLE LIFE, LOAD RATING, AND OTHER CHARACTERISTICS. PLEASE CONTACT JONATHAN ENGINEERED SOLUTIONS FOR DETAILS.

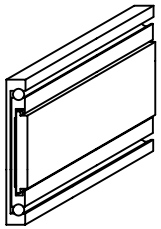

ISOMETRIC REPRESENTATION

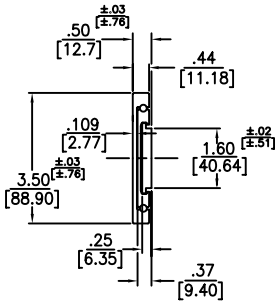

END VIEW

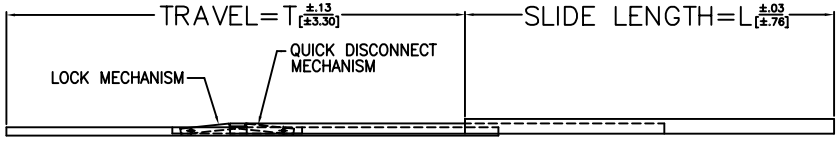

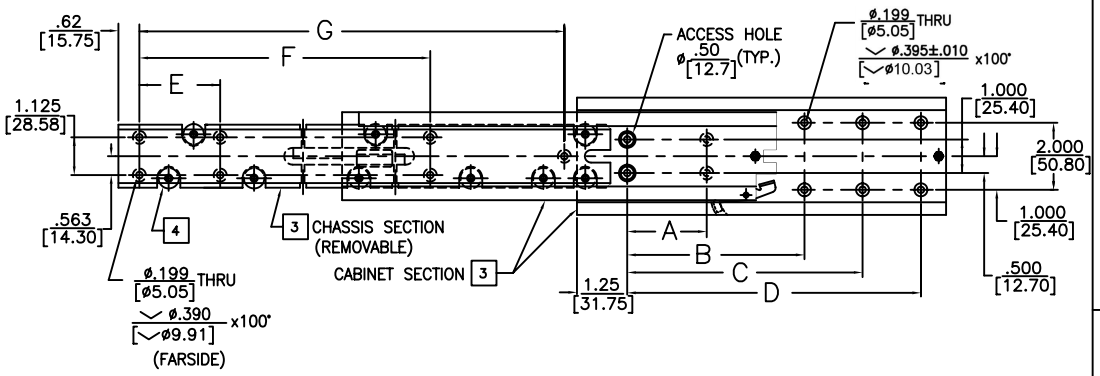

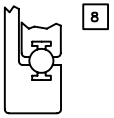

WITH DYNARACE (DR)

PART NO.	SLIDE LENGTH	SLIDE TRAVEL	MOUNTING HOLE PATTERN							LOAD RATING
SERIES – LENGTH	DIM. L	DIM. T	OUTER MEMBER A	B	C	D	CHASSIS SECTION E	F	G	PER PAIR
150QD–10 / DR150QD–10	10 / 254	9 / 228.6			5 / 127	8 / 203.2		6 / 152.4	8 / 203.2	240 LBS / 108 KG
150QD–12 / DR150QD–12	12 / 304.8	11 / 279.4			6 / 152.4	10 / 254		7 / 177.8	10 / 254	265 LBS / 120 KG
150QD–14 / DR150QD–14	14 / 355.6	13 / 330.2			7 / 177.8	12 / 304.8	4 / 101.6	8 / 203.2	12 / 304.8	260 LBS / 117 KG
150QD–16 / DR150QD–16	16 / 406.4	15 / 381	4 / 101.6	8 / 203.2	11 / 279.4	14 / 355.6	4 / 101.6	9 / 228.6	14 / 355.6	241 LBS / 109 KG
150QD–18 / DR150QD–18	18 / 457.2	17 / 431.8	5 / 127	10 / 254	13 / 330.2	16 / 406.4	5 / 127	10 / 254	16 / 406.4	214 LBS / 97 KG
150QD–20 / DR150QD–20	20 / 508	19 / 482.6	5 / 127	10 / 254	14 / 355.6	18 / 457.2	4 / 101.6	12 / 304.8	18 / 457.2	198 LBS / 89 KG
150QD–22 / DR150QD–22	22 / 558.8	21 / 533.4	6 / 152.4	12 / 304.8	16 / 406.4	20 / 508	7 / 177.8	14 / 355.6	20 / 508	183 LBS / 83 KG
150QD–24 / DR150QD–24	24 / 609.6	23 / 584.2	6 / 152.4	12 / 304.8	17 / 431.8	22 / 558.8	8 / 203.2	15 / 381	22 / 558.8	171 LBS / 77 KG
150QD–26 / DR150QD–26	26 / 660.4	25 / 635	7 / 177.8	14 / 355.6	19 / 482.6	24 / 609.6	8 / 203.2	16 / 406.4	24 / 609.6	163 LBS / 73 KG
150QD–28 / DR150QD–28	28 / 711.2	27 / 685.8	7 / 177.8	14 / 355.6	20 / 508	26 / 660.4	9 / 228.6	18 / 457.2	26 / 660.4	156 LBS / 70 KG

JONATHAN® Engineered Solutions
Irvine Technology Center
410 Exchange, Suite 200
Irvine, CA 92602
Tel: (714) 665–4400
Website: www.JonathanEngr.com
Engineering • Production • Integration/Subassembly • Logistics
United States • Mexico • China • Taiwan

DIMENSIONS SHOWN AS: IN. [MM] TOLERANCE UNLESS OTHERWISE NOTED	
.XX / .X	±.010 [±.3]
.XXX / .XX	±.005 [±.13]
ANGLES	±1°

SERIES: 150QD

DATE: 1/11

DESCRIPTION:

ALUMINUM
SERIES 150QD
LOAD RATING: 156–265 LBS./ 70–120 KG.

COPYRIGHT © 2011 JONATHAN ENGINEERED SOLUTIONS

NOTES:

1. LEFT SLIDE AS SHOWN, RIGHT SLIDE OPPOSITE.
2. FOR BRACKETS, SEE BRACKETRY SECTION.
3. CABINET SECTION AND CHASSIS SECTION MAY BE PURCHASED SEPARATELY AND ARE INTERCHANGEABLE. CONTACT JONATHAN FOR ORDERING INFORMATION.
4. AMOUNT AND LOCATION OF ROLLERS TO BE DETERMINED BY JONATHAN.
5. SLIDE LOCKS IN OPEN POSITION ONLY.
6. SLIDE FEATURES QUICK DISCONNECT OF CHASSIS SECTION.
7. SLIDE FEATURES AN ADJUSTABLE REAR SHOCKBLOCK.

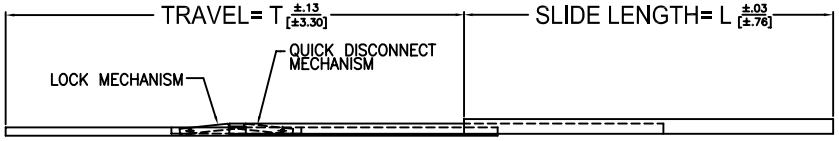

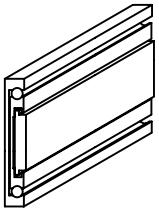

ISOMETRIC REPRESENTATION

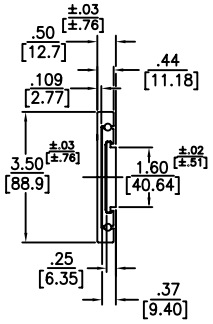

END VIEW

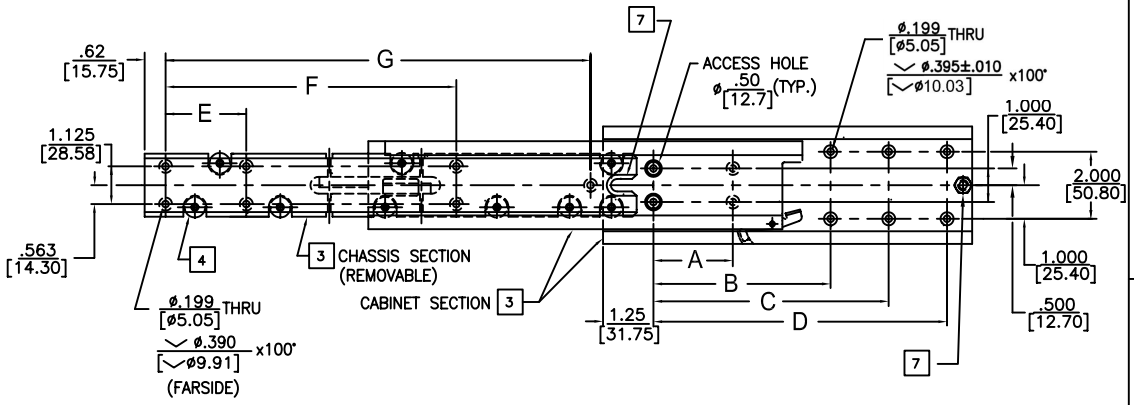

PART NO.	SLIDE LENGTH	SLIDE TRAVEL	MOUNTING HOLE PATTERN							LOAD RATING
SERIES – LENGTH	DIM. L	DIM. T	OUTER MEMBER A	B	C	D	CHASSIS SECTION E	F	G	PER PAIR
150QDA–10	10 / 254	9 / 228.6			5 / 127	8 / 203.2		6 / 152.4	8 / 203.2	240 LBS / 108 KG
150QDA–12	12 / 304.8	11 / 279.4			6 / 152.4	10 / 254		7 / 177.8	10 / 254	265 LBS / 120 KG
150QDA–14	14 / 355.6	13 / 330.2			7 / 177.8	12 / 304.8	4 / 101.6	8 / 203.2	12 / 304.8	260 LBS / 117 KG
150QDA–16	16 / 406.4	15 / 381	4 / 101.6	8 / 203.2	11 / 279.4	14 / 355.6	4 / 101.6	9 / 228.6	14 / 355.6	241 LBS / 109 KG
150QDA–18	18 / 457.2	17 / 431.8	5 / 127	10 / 254	13 / 330.2	16 / 406.4	5 / 127	10 / 254	16 / 406.4	214 LBS / 97 KG
150QDA–20	20 / 508	19 / 482.6	5 / 127	10 / 254	14 / 355.6	18 / 457.2	4 / 101.6	12 / 304.8	18 / 457.2	198 LBS / 89 KG
150QDA–22	22 / 558.8	21 / 533.4	6 / 152.4	12 / 304.8	16 / 406.4	20 / 508	7 / 177.8	14 / 355.6	20 / 508	183 LBS / 83 KG
150QDA–24	24 / 609.6	23 / 584.2	6 / 152.4	12 / 304.8	17 / 431.8	22 / 558.8	8 / 203.2	15 / 381	22 / 558.8	171 LBS / 77 KG
150QDA–26	26 / 660.4	25 / 635	7 / 177.8	14 / 355.6	19 / 482.6	24 / 609.6	8 / 203.2	16 / 406.4	24 / 609.6	163 LBS / 73 KG
150QDA–28	28 / 711.2	27 / 685.8	7 / 177.8	14 / 355.6	20 / 508	26 / 660.4	9 / 228.6	18 / 457.2	26 / 660.4	156 LBS / 70 KG

JONATHAN® Engineered Solutions

Irvine Technology Center
410 Exchange, Suite 200
Irvine, CA 92602
Tel: (714) 665–4400
Website: www.JonathanEngr.com
Engineering•Production•Integration/Subassembly•Logistics
United States • Mexico • China • Taiwan

DIMENSIONS SHOWN AS: IN. / [MM]	TOLERANCE UNLESS OTHERWISE NOTED	SERIES	DESCRIPTION:
.XX / .X	±.010 [±.3]	150QDA	ALUMINUM
.XXX / .XX	±.005 [±.13]	DATE: 1/11	SERIES 150QDA
ANGLES	±1°		LOAD RATING: 156–265 LBS./ 70–120 KG.

COPYRIGHT © 2011 JONATHAN ENGINEERED SOLUTIONS

NOTES:

1. LEFT SLIDE AS SHOWN, RIGHT SLIDE OPPOSITE.
2. SLIDE LOCKS IN OPEN POSITION ONLY.
3. FOR BRACKETS, SEE BRACKETRY SECTION.
4. SLIDE FEATURES QUICK DISCONNECT OF CHASSIS SECTION AND 90° PIVOT POSITION. ALSO AVAILABLE WITH ±45° PIVOT.
5. CABINET SECTION OR CHASSIS SECTION MAY BE PURCHASED SEPARATELY AND ARE INTERCHANGEABLE. CONTACT JONATHAN FOR ORDERING INSTRUCTIONS.
6. ALL MEMBERS FLUSH AT REAR OF SLIDE IN CLOSED POSITION.
7. AMOUNT OF ROLLERS TO BE DETERMINED BY JONATHAN ENGINEERED SOLUTIONS.

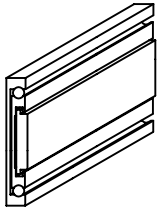

ISOMETRIC REPRESENTATION

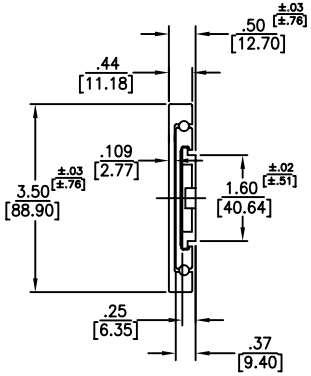

END VIEW

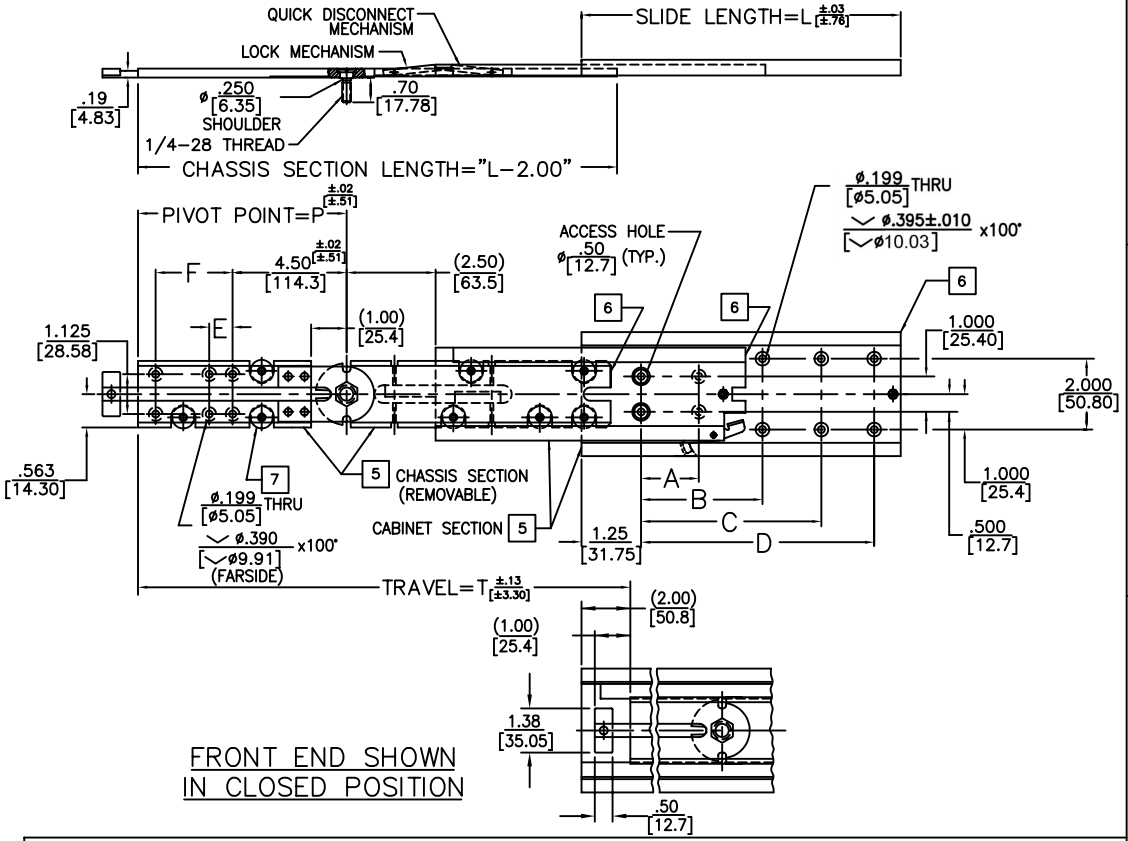

FRONT END SHOWN IN CLOSED POSITION

PART NO.	SLIDE LENGTH	SLIDE TRAVEL	PIVOT POINT	MOUNTING HOLE PATTERN						LOAD RATING
SERIES LENGTH	DIM. L	DIM. T	DIM. P	OUTER MEMBER A	B	C	D	PIVOT PLATE E	F	PER PAIR
150QDP-14	14 / 355.6	15 / 381	5 / 127			8 / 203.2	12 / 304.8			225 LBS / 102 KG
150QDP-16	16 / 406.4	17 / 431.8	6 / 152.4	4 / 101.6	9 / 228.6	11 / 279.4	14 / 355.6		1 / 25.4	207 LBS / 93 KG
150QDP-18	18 / 457.2	19 / 482.6	7 / 177.8	5 / 127	10 / 254	13 / 330.2	16 / 406.4		2 / 50.8	185 LBS / 83 KG
150QDP-20	20 / 508	21 / 533.4	8 / 203.2	5 / 127	11 / 279.4	14 / 355.6	18 / 457.2		3 / 76.2	170 LBS / 77 KG
150QDP-22	22 / 558.8	23 / 584.2	9 / 228.6	6 / 152.4	12 / 304.8	16 / 406.4	20 / 508	2 / 50.8	4 / 101.6	160 LBS / 72 KG
150QDP-24	24 / 609.6	25 / 635	10 / 254	6 / 152.4	13 / 330.2	17 / 431.8	22 / 558.8	2.5 / 63.5	5 / 127	154 LBS / 69 KG
150QDP-26	26 / 660.4	27 / 685.8	11 / 279.4	7 / 177.8	14 / 355.6	19 / 482.6	24 / 609.6	3 / 76.2	6 / 152.4	149 LBS / 67 KG
150QDP-28	28 / 711.2	29 / 736.6	12 / 304.8	7 / 177.8	15 / 381	20 / 508	26 / 660.4	3.5 / 88.9	7 / 177.8	145 LBS / 65 KG
150QDP-30	30 / 762	31 / 787.4	13 / 330.2	8 / 203.2	16 / 406.4	22 / 558.8	28 / 711.2	4 / 101.6	8 / 203.2	142 LBS / 64 KG
150QDP-32	32 / 812.8	33 / 838.2	14 / 355.6	8 / 203.2	17 / 431.8	23 / 584.2	30 / 762	4.5 / 114.3	9 / 228.6	137 LBS / 62 KG
150QDP-34	34 / 863.6	35 / 889	15 / 381	9 / 228.6	18 / 457.2	25 / 635	32 / 812.8	5 / 127	10 / 254	132 LBS / 59 KG
150QDP-36	36 / 914.4	37 / 939.8	16 / 406.4	9 / 228.6	19 / 482.6	26 / 660.4	34 / 863.6	5.5 / 139.7	11 / 279.4	126 LBS / 57 KG

JONATHAN® Engineered Solutions
Irvine Technology Center
410 Exchange, Suite 200
Irvine, CA 92602
Tel: (714) 665-4400
Website: www.JonathanEngr.com
Engineering • Production • Integration/Subassembly • Logistics
United States • Mexico • China • Taiwan

DIMENSIONS SHOWN AS: IN. / [MM]	TOLERANCE UNLESS OTHERWISE NOTED
.XX / .X	±.010 [±.3]
.XXX / .XX	±.005 [±.13]
ANGLES	±1°

SERIES: 150QDP

DATE: 1/11

DESCRIPTION:
ALUMINUM
SERIES 150QDP
LOAD RATING: 126-225 LBS./ 57-102 KG.

COPYRIGHT © 2011 JONATHAN ENGINEERED SOLUTIONS

NOTES:

1. LEFT SLIDE AS SHOWN, RIGHT SLIDE OPPOSITE.
2. FOR BRACKETS, SEE BRACKETRY SECTION.
3. SLIDE IS PROVIDED WITH LOCK TYPE "E". LOCKS IN OPEN POSITION ONLY. (OPTIONAL)

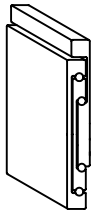

ISOMETRIC REPRESENTATION

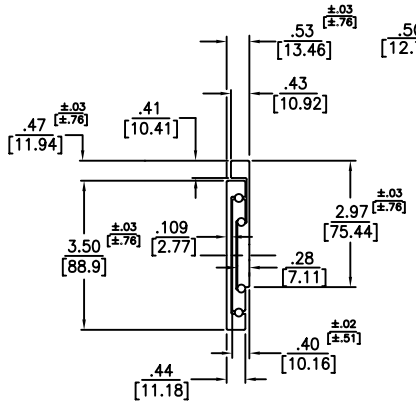

END VIEW

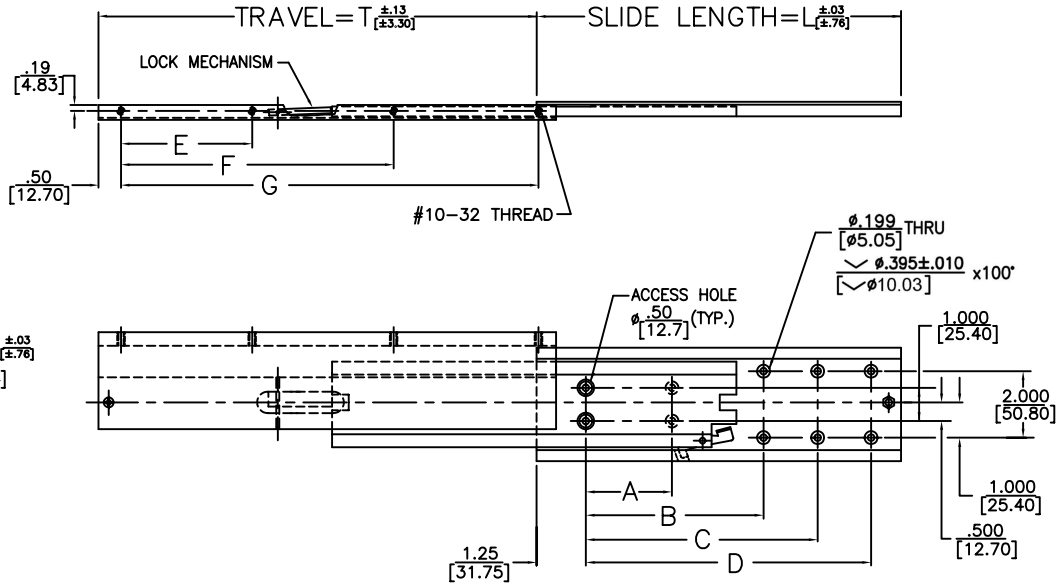

PART NO.	SLIDE LENGTH	SLIDE TRAVEL	MOUNTING HOLE PATTERN							LOAD RATING
SERIES – LENGTH	DIM. L	DIM. T	OUTER MEMBER A	OUTER MEMBER B	OUTER MEMBER C	OUTER MEMBER D	INNER MEMBER E	INNER MEMBER F	INNER MEMBER G	PER PAIR
156–10	10	9			5	8	3	6	9	240 LBS
156L–10	254	228.6			127	203.2	76.2	152.4	228.6	108 KG
156–12	12	11			6	10	4	7	11	265 LBS
156L–12	304.8	279.4			152.4	254	101.6	177.8	279.4	120 KG
156–14	14	13			7	12	4	9	13	260 LBS
156L–14	355.6	330.2			177.8	304.8	101.6	228.6	330.2	117 KG
156–16	16	15	4	8	11	14	5	10	15	241 LBS
156L–16	406.4	381	101.6	203.2	279.4	355.6	127	254	381	109 KG
156–18	18	17	5	10	13	16	6	11	17	214 LBS
156L–18	457.2	431.8	127	254	330.2	406.4	152.4	279.4	431.8	97 KG
156–20	20	19	5	10	14	18	6	13	19	198 LBS
156L–20	508	482.6	127	254	355.6	457.2	152.4	330.2	482.6	89 KG
156–22	22	21	6	12	16	20	7	14	21	183 LBS
156L–22	558.8	533.4	152.4	304.8	406.4	508	177.8	355.6	533.4	83 KG
156–24	24	23	6	12	17	22	8	15	23	171 LBS
156L–24	609.6	584.2	152.4	304.8	431.8	558.8	203.2	381	584.2	77 KG
156–26	26	25	7	14	19	24	8	17	25	163 LBS
156L–26	660.4	635	177.8	355.6	482.6	609.6	203.2	431.8	635	73 KG
156–28	28	27	7	14	20	26	9	18	27	156 LBS
156L–28	711.2	685.8	177.8	355.6	508	660.4	228.6	457.2	685.8	70 KG
156–30	30	29	8	16	22	28	10	19	29	150 LBS
156L–30	762	736.6	203.2	406.4	558.8	711.2	254	482.6	736.6	68 KG
156–32	32	31	8	16	23	30	10	21	31	146 LBS
156L–32	812.8	787.4	203.2	406.4	584.2	762	254	533.4	787.4	66 KG
156–34	34	33	9	18	25	32	11	22	33	142 LBS
156L–34	863.6	838.2	228.6	457.2	635	812.8	279.4	558.8	838.2	64 KG
156–36	36	35	9	18	26	34	12	23	35	136 LBS
156L–36	914.4	889	228.6	457.2	660.4	863.6	304.8	584.2	889	61 KG

JONATHAN® Engineered Solutions

Irvine Technology Center
410 Exchange, Suite 200
Irvine, CA 92602
Tel: (714) 665–4400
Website: www.JonathanEngr.com
Engineering • Production • Integration/Subassembly • Logistics
United States • Mexico • China • Taiwan

DIMENSIONS SHOWN AS: IN. [MM]	TOLERANCE UNLESS OTHERWISE NOTED
.XX / .X	±.010 [±.3]
.XXX / .XX	±.005 [±.13]
ANGLES	±1°

SERIES: 156

DATE: 1/11

DESCRIPTION:

ALUMINUM
SERIES 156
LOAD RATING: 136–240 LBS./ 61–108 KG.

COPYRIGHT © 2011 JONATHAN ENGINEERED SOLUTIONS

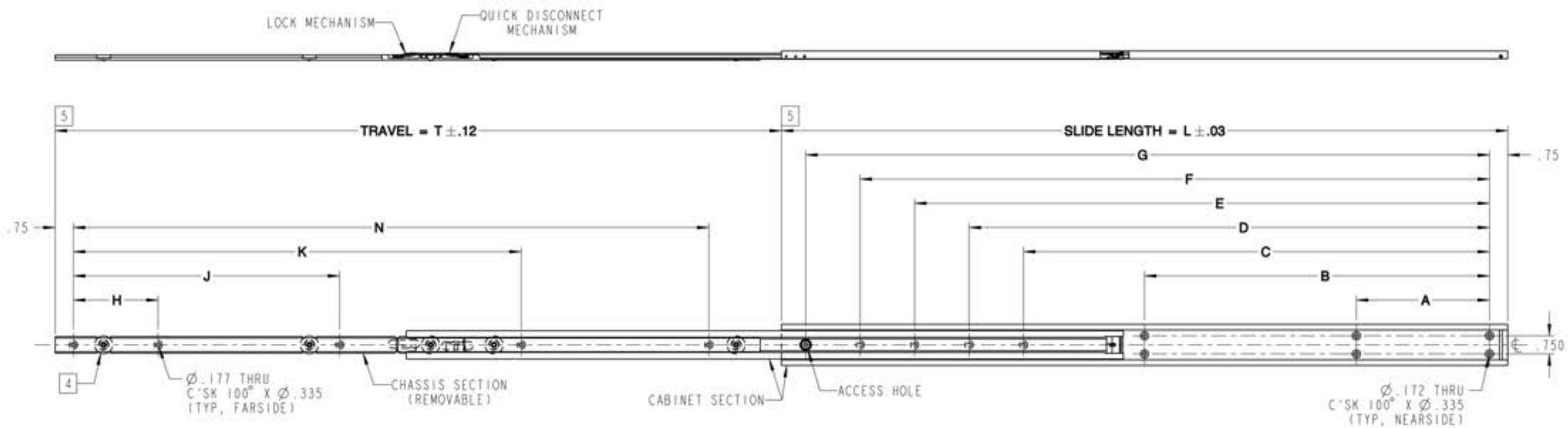

7. CABINET SECTION OR CHASSIS SECTION MAY BE PURCHASED SEPARATELY AND ARE INTERCHANGEABLE.

6. SLIDE IS SYMMETRICAL, MAY BE USED AS LEFT-HAND OR RIGHT-HAND MOUNTING UNIT.

[5] FOR REFERENCE PURPOSE ONLY, THESE SURFACES TO ALIGN WHEN SLIDE IS IN CLOSED POSITION.

[4] AMOUNT AND LOCATION OF BALL BEARING ROLLERS DETERMINED BY JONATHAN ENGINEERED SOLUSTIONS.

3. SLIDE LOCKS IN FULL OPEN POSITION AND IS PROVIDED WITH QUICK DISCONNECT OF CHASSIS SECTION.

2. FINISH: SLIDE CHANNELS AND ALUMINUM COMPONENTS ARE ANODIZED PER MIL-A-8625, TYPE II, CLASS I. CRES COMPONENTS ARE PASSIVATED PER SAE-AMS-QQ-P-35.

1. MATERIAL: SLIDE CHANNELS ARE FABRICATED FROM ALUMINUM ALLOY 7075-T6. COMPONENT PARTS ARE 302/303 CRES AND HIGH STRENGTH ALUMINUM. BALL BEARINGS ARE 440 CRES.

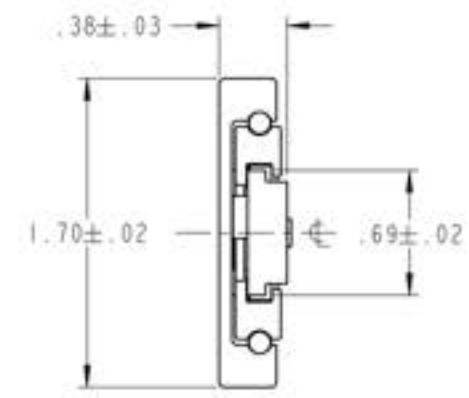

END VIEW

PART NO.	SLIDE LENGTH	SLIDE TRAVEL	CABINET SECTION							CHASSIS SECTION				LOAD RATING - PER PAIR
SERIES - LENGTH	L	T	A	B	C	D	E	F	G	H	J	K	N	
170QD-10	10	10	4.000	-	6.000	-	-	-	8.250	2.500	-	-	6.750	135 lbs
170QD-12	12	12	4.000	-	8.000	-	-	-	10.250	3.500	-	-	8.250	130 lbs
170QD-14	14	14	5.500	-	10.000	-	-	-	12.250	3.500	-	9.000	10.250	125 lbs
170QD-16	16	16	5.500	-	9.750	12.000	-	-	14.250	3.500	-	10.000	12.250	120 lbs
170QD-18	18	18	5.500	-	9.500	11.750	14.000	-	16.250	3.500	6.000	12.500	14.250	115 lbs
170QD-20	20	20	5.500	-	11.500	13.750	16.000	-	18.250	3.500	7.000	13.500	16.250	110 lbs
170QD-22	22	22	5.500	-	13.500	15.750	18.000	-	20.250	3.500	8.000	14.500	18.250	105 lbs
170QD-24	24	24	5.500	-	13.250	15.500	17.750	20.000	22.250	3.500	9.000	15.500	20.250	100 lbs
170QD-26	26	26	5.500	11.250	15.250	17.500	19.750	22.000	24.250	3.500	10.00	16.500	22.250	95 lbs
170QD-28	28	28	5.500	13.250	17.250	19.500	21.750	24.000	26.250	3.500	10.000	17.500	24.250	90 lbs
170QD-30	30	30	5.500	14.250	19.250	21.500	23.750	26.000	28.250	3.500	11.000	18.500	26.250	80 lbs

JONATHAN® Engineered Solutions

Irvine Technology Center
410 Exchange, Suite 200
Irvine, CA 92602
Tel. (714) 665-4400
Fax: (714) 368-7002
Website: www.jonathanengr.com
Engineer - Production - Integration/ Subassembly - Logistics
United States - Mexico - China - Taiwan

TOLERANCES UNLESS OTHERWISE NOTED				PART NUMBER :	DESCRIPTION :
.XX	.XXX	ANGLES	HOLES	170QD	ALUMINUM 170QD LOAD RATING : 80-135 lbs
± .01	± .005	± 1°	± .005	DATE : 1/11	
SHEET 1 OF 1					

COPYRIGHT © 2011 JONATHAN ENGINEERED SOLUTIONS

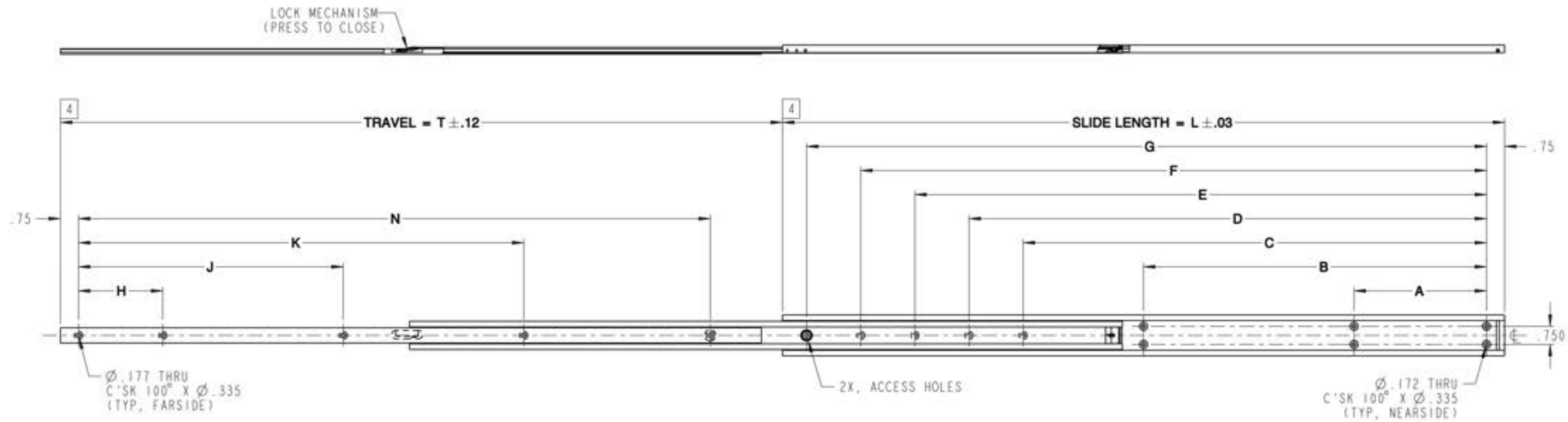

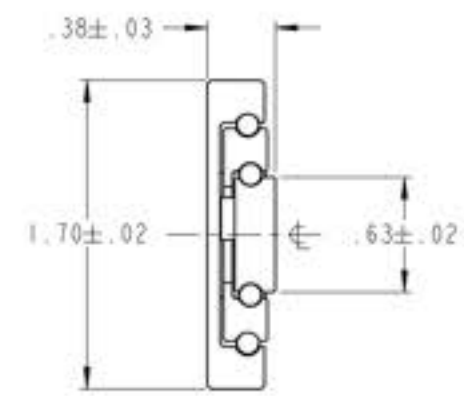

END VIEW

5. SLIDE IS SYMMETRICAL, MAY BE USED AS LEFT-HAND OR RIGHT-HAND MOUNTING UNIT.

[4] FOR REFERENCE PURPOSE ONLY, THESE SURFACES TO ALIGN WHEN SLIDE IS IN CLOSED POSITION.

3. SLIDE LOCKS IN FULL OPEN POSITION.

2. FINISH: SLIDE CHANNELS AND ALUMINUM COMPONENTS ARE ANODIZED PER MIL-A-8625, TYPE II, CLASS I. CRES COMPONENTS ARE PASSIVATED PER SAE-AMS-QQ-P-35.

1. MATERIAL: SLIDE CHANNELS ARE FABRICATED FROM ALUMINUM ALLOY 7075-T6. COMPONENT PARTS ARE 302/303 CRES AND HIGH STRENGTH ALUMINUM. BALL BEARINGS ARE 440 CRES.

PART NO.	SLIDE LENGTH	SLIDE TRAVEL	CABINET SECTION							CHASSIS SECTION				LOAD RATING
SERIES - LENGTH	L	T	A	B	C	D	E	F	G	H	J	K	N	PER PAIR
170FB-10	10	10	4.000	-	6.000	-	-	-	8.250	2.500	-	-	6.750	140 lbs
170FB-12	12	12	4.000	-	8.000	-	-	-	10.250	3.500	-	-	8.250	135 lbs
170FB-14	14	14	5.500	-	10.000	-	-	-	12.250	3.500	-	9.000	10.250	130 lbs
170FB-16	16	16	5.500	-	9.750	12.000	-	-	14.250	3.500	-	10.000	12.250	125 lbs
170FB-18	18	18	5.500	-	9.500	11.750	14.000	-	16.250	3.500	6.000	12.500	14.250	120 lbs
170FB-20	20	20	5.500	-	11.500	13.750	16.000	-	18.250	3.500	7.000	13.500	16.250	115 lbs
170FB-22	22	22	5.500	-	13.500	15.750	18.000	-	20.250	3.500	8.000	14.500	18.250	110 lbs
170FB-24	24	24	5.500	-	13.250	15.500	17.750	20.000	22.250	3.500	9.000	15.500	20.250	105 lbs
170FB-26	26	26	5.500	11.250	15.250	17.500	19.750	22.000	24.250	3.500	10.000	16.500	22.250	100 lbs
170FB-28	28	28	5.500	13.250	17.250	19.500	21.750	24.000	26.250	3.500	10.000	17.500	24.250	95 lbs
170FB-30	30	30	5.500	14.250	19.250	21.500	23.750	26.000	28.250	3.500	11.000	18.500	26.250	85 lbs

JONATHAN® Engineered Solutions

Irvine Technology Center
410 Exchange, Suite 200
Irvine, CA 92602
Tel. (714) 665-4400
Fax: (714) 368-7002
Website: www.jonathanengr.com
Engineer - Production - Integration/ Subassembly - Logistics
United States - Mexico - China - Taiwan

TOLERANCES UNLESS OTHERWISE NOTED				PART NUMBER :	DESCRIPTION :
.XX	.XXX	ANGLES	HOLES	170FB	ALUMINUM 170FB LOAD RATING : 85-140 lbs
± .01	± .005	± 1°	± .005	DATE : 1/11	
SHEET 1 OF 1					

COPYRIGHT © 2011 JONATHAN ENGINEERED SOLUTIONS

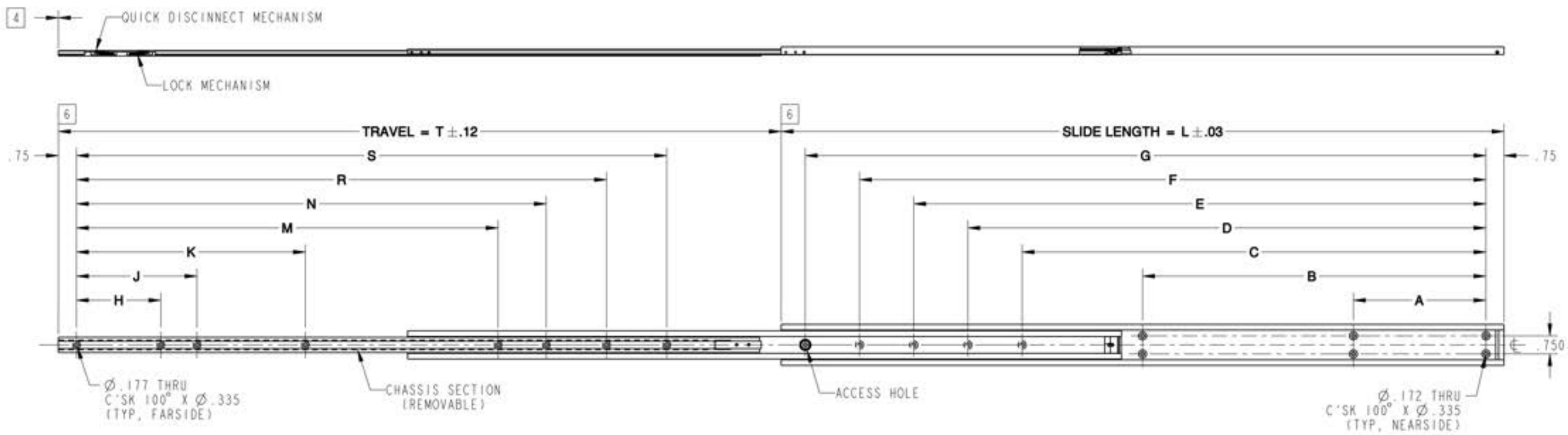

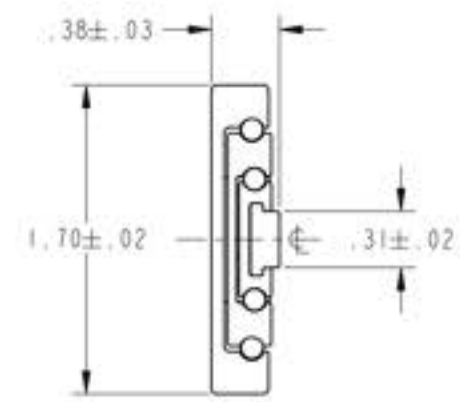

END VIEW

6 FOR REFERENCE PURPOSE ONLY, THESE SURFACES TO ALIGN WHEN SLIDE IS IN CLOSED POSITION.

5. SLIDE IS SYMMETRICAL, MAY BE USED AS LEFT-HAND OR RIGHT-HAND MOUNTING UNIT.

4 CHASSIS SECTION MUST PULL OUT .22" FOR LOCK OPEN TO ENGAGE.

3. SLIDE LOCKS IN FULL OPEN POSITION AND IS PROVIDED WITH QUICK DISCONNECT OF CHASSIS SECTION.

2. FINISH: SLIDE CHANNELS AND ALUMINUM COMPONENTS ARE ANODIZED PER MIL-A-8625, TYPE II, CLASS I. CRES COMPONENTS ARE PASSIVATED PER SAE-AMS-QQ-P-35.

1. MATERIAL: SLIDE CHANNELS ARE FABRICATED FROM ALUMINUM ALLOY 7075-T6. COMPONENT PARTS ARE 302/303 CRES AND HIGH STRENGTH ALUMINUM. BALL BEARINGS ARE 440 CRES.

PART NO.	SLIDE LENGTH	SLIDE TRAVEL	CABINET SECTION							CHASSIS SECTION							LOAD RATING - PER PAIR
SERIES - LENGTH	L	T	A	B	C	D	E	F	G	H	J	K	M	N	R	S	
170T-10	10	10	4.000	-	6.000	-	-	-	8.250	3.500	-	-	-	-	-	5.500	135 lbs
170T-12	12	12	4.000	-	8.000	-	-	-	10.250	3.500	-	-	5.500	-	-	7.500	130 lbs
170T-14	14	14	5.500	-	10.000	-	-	-	12.250	3.500	-	5.000	8.000	-	-	9.500	125 lbs
170T-16	16	16	5.500	-	9.750	12.000	-	-	14.250	3.500	-	5.000	9.000	-	-	11.500	120 lbs
170T-18	18	18	5.500	-	9.500	11.750	14.000	-	16.250	3.500	-	5.000	8.500	-	11.000	13.500	115 lbs
170T-20	20	20	5.500	-	11.500	13.750	16.000	-	18.250	3.500	-	5.000	8.500	-	11.000	15.500	110 lbs
170T-22	22	22	5.500	-	13.500	15.750	18.000	-	20.250	3.500	5.000	7.500	11.500	14.000	-	17.500	105 lbs
170T-24	24	24	5.500	-	13.250	15.500	17.750	20.000	22.250	3.500	5.000	7.500	11.000	13.500	16.000	19.500	100 lbs
170T-26	26	26	5.500	11.250	15.250	17.500	19.750	22.000	24.250	3.500	5.000	7.500	13.000	15.500	18.000	21.500	95 lbs
170T-28	28	28	5.500	13.250	17.250	19.500	21.750	24.000	26.250	3.500	5.000	8.500	15.000	17.500	20.000	23.500	90 lbs
170T-30	30	30	5.500	14.250	19.250	21.500	23.750	26.000	28.250	3.500	5.000	9.500	17.000	19.500	22.000	25.500	80 lbs

JONATHAN® Engineered Solutions

Irvine Technology Center
410 Exchange, Suite 200
Irvine, CA 92602
Tel. (714) 665-4400
Fax: (714) 368-7002
Website: www.jonathanengr.com
Engineer - Production - Integration/ Subassembly - Logistics
United States - Mexico - China - Taiwan

TOLERANCES UNLESS OTHERWISE NOTED				PART NUMBER :	DESCRIPTION :
				170T	ALUMINUM 170T LOAD RATING : 80-135 lbs
.XX	.XXX	ANGLES	HOLES	DATE :	
± .01	± .005	± 1°	± .005	1/11	
SHEET 1 OF 1					

COPYRIGHT © 2011 JONATHAN ENGINEERED SOLUTIONS

NOTES:

1. LEFT SLIDE AS SHOWN, RIGHT SLIDE OPPOSITE.
2. FOR LOCKING DEVICES, SEE ACCESSORIES SECTION.

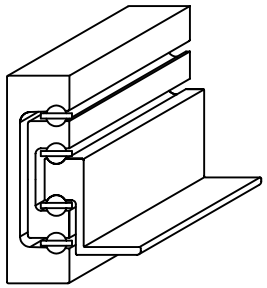

ISOMETRIC REPRESENTATION

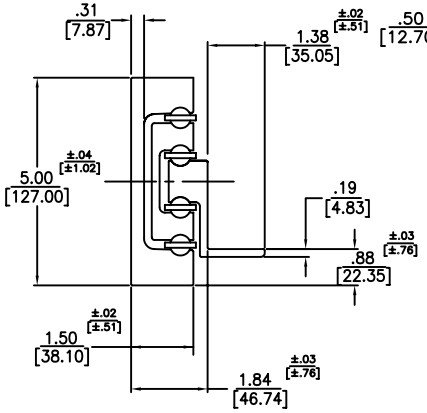

END VIEW

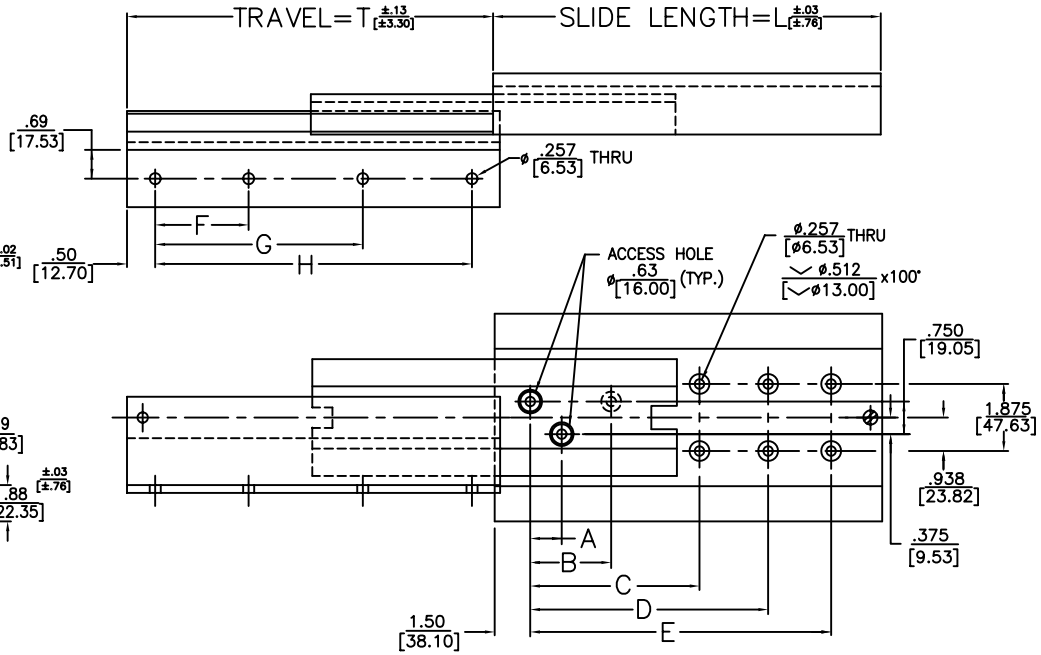

PART NO. SERIES LENGTH	SLIDE LENGTH DIM. L	SLIDE TRAVEL DIM. T	MOUNTING HOLE PATTERN OUTER MEMBER A	B	C	D	E	INNER MEMBER F	G	H	LOAD RATING PER PAIR
181–14	14 / 355.6	13 / 330.2	4 / 101.6			7 / 177.8	11 / 279.4	4 / 101.6	9 / 228.6	13 / 330.2	980 LBS / 444 KG
181–16	16 / 406.4	15 / 381	4 / 101.6			8 / 203.2	13 / 330.2	5 / 127	10 / 254	15 / 381	960 LBS / 435 KG
181–18	18 / 457.2	17 / 431.8	5 / 127			9 / 228.6	15 / 381	6 / 152.4	11 / 279.4	17 / 431.8	845 LBS / 383 KG
181–20	20 / 508	19 / 482.6	6 / 152.4			11 / 279.4	17 / 431.8	6 / 152.4	13 / 330.2	19 / 482.6	760 LBS / 344 KG
181–22	22 / 558.8	21 / 533.4	4 / 101.6	7 / 177.8	11 / 279.4	15 / 381	19 / 482.6	7 / 177.8	14 / 355.6	21 / 533.4	700 LBS / 317 KG
181–24	24 / 609.6	23 / 584.2	5 / 127	9 / 228.6	13 / 330.2	17 / 431.8	21 / 533.4	8 / 203.2	15 / 381	23 / 584.2	670 LBS / 303 KG
181–26	26 / 660.4	25 / 635	5 / 127	9 / 228.6	13 / 330.2	18 / 457.2	23 / 584.2	8 / 203.2	17 / 431.8	25 / 635	640 LBS / 290 KG
181–28	28 / 711.2	27 / 685.8	6 / 152.4	11 / 279.4	15 / 381	20 / 508	25 / 635	9 / 228.6	18 / 457.2	27 / 685.8	615 LBS / 278 KG
181–30	30 / 762	29 / 736.6	6 / 152.4	11 / 279.4	15 / 381	21 / 533.4	27 / 685.8	10 / 254	19 / 482.6	29 / 736.6	600 LBS / 272 KG
181–32	32 / 812.8	31 / 787.4	6 / 152.4	11 / 279.4	17 / 431.8	23 / 584.2	29 / 736.6	10 / 254	21 / 533.4	31 / 787.4	590 LBS / 267 KG
181–34	34 / 863.6	33 / 838.2	6 / 152.4	11 / 279.4	17 / 431.8	24 / 609.6	31 / 787.4	11 / 279.4	22 / 558.8	33 / 838.2	580 LBS / 263 KG
181–36	36 / 914.4	35 / 889	7 / 177.8	13 / 330.2	19 / 482.6	26 / 660.4	33 / 838.2	12 / 304.8	23 / 584.2	35 / 889	565 LBS / 256 KG

JONATHAN® Engineered Solutions

Irvine Technology Center
410 Exchange, Suite 200
Irvine, CA 92602
Tel: (714) 665–4400
Website: www.JonathanEngr.com
Engineering • Production • Integration/Subassembly • Logistics
United States • Mexico • China • Taiwan

DIMENSIONS SHOWN AS: IN. / [MM]	TOLERANCE UNLESS OTHERWISE NOTED
.XX / .X	±.010 / [±.3]
.XXX / .XX	±.005 / [±.13]
ANGLES	±1°

SERIES: 181

DATE: 1/11

DESCRIPTION:

ALUMINUM
SERIES 181
LOAD RATING: 565–980 LBS./ 256–444 KG.

COPYRIGHT © 2011 JONATHAN ENGINEERED SOLUTIONS

NOTES:

1. LEFT SLIDE AS SHOWN, RIGHT SLIDE OPPOSITE.
2. FOR LOCKING DEVICES, SEE ACCESSORIES SECTION.

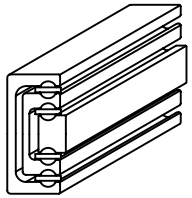

ISOMETRIC REPRESENTATION

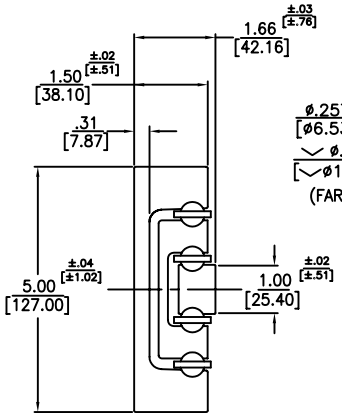

END VIEW

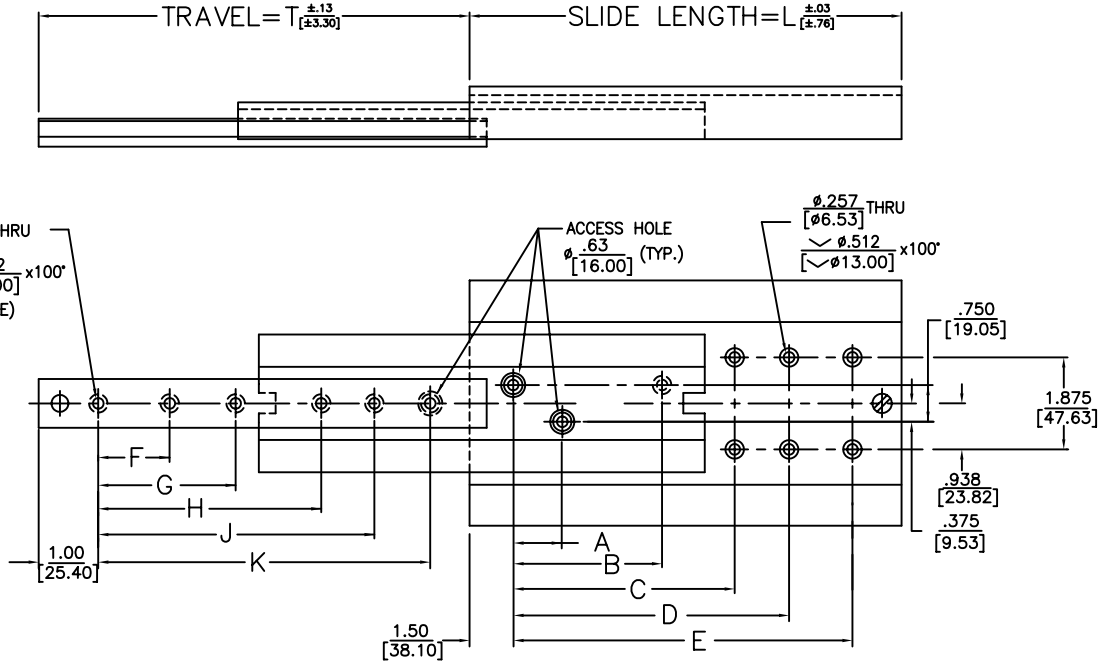

PART NO.	SLIDE LENGTH	SLIDE TRAVEL	MOUNTING HOLE PATTERN										LOAD RATING
SERIES LENGTH	DIM. L	DIM. T	OUTER MEMBER A	B	C	D	E	INNER MEMBER F	G	H	J	K	PER PAIR
182–14	14 / 355.6	13 / 330.2	4 / 101.6			7 / 177.8	11 / 279.4	4 / 101.6		7 / 177.8		11 / 279.4	980 LBS / 444 KG
182–16	16 / 406.4	15 / 381	4 / 101.6			8 / 203.2	13 / 330.2	4 / 101.6		9 / 228.6		13 / 330.2	960 LBS / 435 KG
182–18	18 / 457.2	17 / 431.8	5 / 127			9 / 228.6	15 / 381	5 / 127		10 / 254		15 / 381	845 LBS / 383 KG
182–20	20 / 508	19 / 482.6	6 / 152.4			11 / 279.4	17 / 431.8	3 / 76.2	7 / 177.8	10 / 254	14 / 355.6	17 / 431.8	760 LBS / 344 KG
182–22	22 / 558.8	21 / 533.4	4 / 101.6	7 / 177.8	11 / 279.4	15 / 381	19 / 482.6	4 / 101.6	8 / 203.2	11 / 279.4	15 / 381	19 / 482.6	700 LBS / 317 KG
182–24	24 / 609.6	23 / 584.2	5 / 127	9 / 228.6	13 / 330.2	17 / 431.8	21 / 533.4	4 / 101.6	8 / 203.2	13 / 330.2	17 / 431.8	21 / 533.4	670 LBS / 303 KG
182–26	26 / 660.4	25 / 635	5 / 127	9 / 228.6	13 / 330.2	18 / 457.2	23 / 584.2	5 / 127	9 / 228.6	14 / 355.6	18 / 457.2	23 / 584.2	640 LBS / 290 KG
182–28	28 / 711.2	27 / 685.8	6 / 152.4	11 / 279.4	15 / 381	20 / 508	25 / 635	5 / 127	10 / 254	15 / 381	20 / 508	25 / 635	615 LBS / 278 KG
182–30	30 / 762	29 / 736.6	6 / 152.4	11 / 279.4	15 / 381	21 / 533.4	27 / 685.8	5 / 127	11 / 279.4	16 / 406.4	22 / 558.8	27 / 685.8	600 LBS / 272 KG
182–32	32 / 812.8	31 / 787.4	6 / 152.4	11 / 279.4	17 / 431.8	23 / 584.2	29 / 736.6	6 / 152.4	12 / 304.8	17 / 431.8	23 / 584.2	29 / 736.6	590 LBS / 267 KG
182–34	34 / 863.6	33 / 838.2	6 / 152.4	11 / 279.4	17 / 431.8	24 / 609.6	31 / 787.4	6 / 152.4	12 / 304.8	19 / 482.6	25 / 635	31 / 787.4	580 LBS / 263 KG
182–36	36 / 914.4	35 / 889	7 / 177.8	13 / 330.2	19 / 482.6	26 / 660.4	33 / 838.2	7 / 177.8	13 / 330.2	21 / 533.4	26 / 660.4	33 / 838.2	565 LBS / 256 KG

Irvine Technology Center
410 Exchange, Suite 200
Irvine, CA 92602
Tel: (714) 665–4400
Website: www.JonathanEngr.com
Engineering•Production•Integration/Subassembly•Logistics
United States • Mexico • China • Taiwan

DIMENSIONS SHOWN AS: IN. / [MM]

TOLERANCE UNLESS OTHERWISE NOTED

.XX / .X	±.010 / [±.3]
.XXX / .XX	±.005 / [±.13]
ANGLES	±1°

SERIES: 182

DATE: 1/11

DESCRIPTION:

ALUMINUM
SERIES 182
LOAD RATING: 565–980 LBS./ 256–444 KG.

COPYRIGHT © 2011 JONATHAN ENGINEERED SOLUTIONS

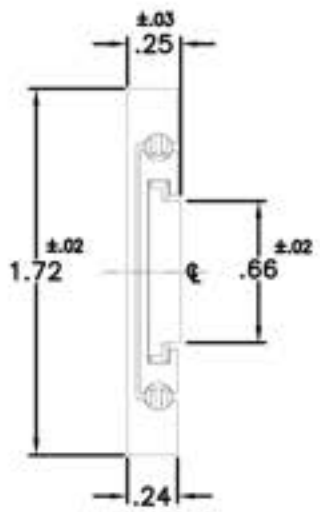

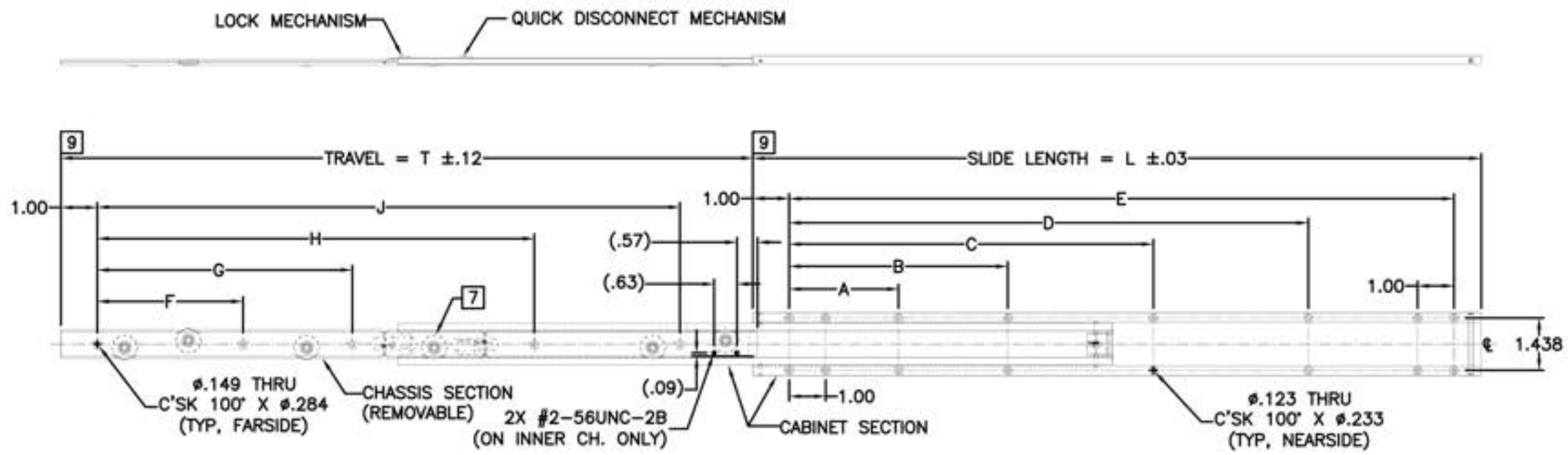

PART NO.	SLIDE LENGTH	SLIDE TRAVEL	CABINET SECTION					CHASSIS SECTION				LOAD RATING
SERIES – LENGTH	L	T	A	B	C	D	E	F	G	H	J	PER PAIR
250QD–10	10	9	2.000	–	–	5.250	8.250	2.000	–	–	6.500	110 lbs
250QD–11	11	10	2.000	–	–	6.250	9.250	2.000	–	–	7.500	105 lbs
250QD–12	12	11	2.000	–	–	6.250	10.250	2.000	3.000	–	8.500	100 lbs
250QD–13	13	12	3.000	–	–	7.250	11.250	2.000	3.000	–	9.500	100 lbs
250QD–14	14	13	3.000	–	–	7.250	12.250	2.000	4.000	–	10.500	95 lbs
250QD–15	15	14	3.000	–	–	8.250	13.250	2.000	4.000	–	11.500	95 lbs
250QD–16	16	15	4.000	8.000	–	11.250	14.250	3.000	5.000	10.000	12.500	90 lbs
250QD–17	17	16	4.000	8.000	–	12.250	15.250	3.000	5.000	11.000	13.500	90 lbs
250QD–18	18	17	5.000	10.000	–	13.250	16.250	4.000	6.000	11.000	14.500	85 lbs
250QD–19	19	18	5.000	10.000	–	14.250	17.250	4.000	6.000	12.000	15.500	85 lbs
250QD–20	20	19	3.000	6.000	10.000	14.250	18.250	4.000	7.000	12.000	16.500	80 lbs
250QD–21	21	20	3.000	6.000	10.000	15.250	19.250	4.000	7.000	13.000	17.500	80 lbs
250QD–22	22	21	3.000	7.000	12.000	16.250	20.250	5.000	8.000	13.000	18.500	70 lbs
250QD–23	23	22	3.000	7.000	12.000	17.250	21.250	5.000	8.000	14.000	19.500	70 lbs
250QD–24	24	23	3.000	7.000	12.000	17.250	22.250	6.000	9.000	14.000	20.500	65 lbs
250QD–25	25	24	3.000	7.000	12.000	18.250	23.250	6.000	9.000	15.000	21.500	60 lbs
250QD–26	26	25	4.000	8.000	14.000	19.250	24.250	6.000	10.000	16.000	22.500	55 lbs
250QD–27	27	26	4.000	8.000	14.000	20.250	25.250	6.000	10.000	17.000	23.500	50 lbs
250QD–28	28	27	4.000	8.000	14.000	20.250	26.250	6.000	11.000	18.000	24.500	45 lbs

9 THESE SURFACES ALIGN WHEN SLIDE IS IN THE CLOSED POSITION.

8. CABINET SECTION AND CHASSIS SECTION MAY BE PURCHASED SEPARATELY AND ARE INTERCHANGEABLE.

7 AMOUNT AND LOCATION OF ROLLERS TO BE DETERMINED BY JONATHAN ENGINEERING SOLUTIONS.

6. USE #6 100 DEG. FLAT HEAD MACHINE SCREW FOR MOUNTING THRU INNER MEMBER.

5. USE #4 100 DEG. FLAT HEAD MACHINE SCREW FOR MOUNTING THRU OUTER MEMBER.

4. SLIDE LOCKS IN OPEN POSITION AND IS PROVIDED WITH QUICK DISCONNECT OF CHASSIS SECTION.

3. LEFT HAND SHOWN, RIGHT HAND OPPOSITE.

2. FINISH: CHANNELS ARE ANODIZED PER MIL–A–8625 TYPE II, CLASS 1.
CRES PARTS PASSIVATED PER SAE–AMS–QQ–P–35.

1. MATERIAL: CHANNELS ARE FABRICATED FROM HIGH STRENGTH ALUMINUM ALLOYS WITH TENSILE STRENGTH OF 35,000 PSI MIN. (PER ASTM B221)
COMPONENT PARTS ARE 302 OR 303 CRES AND HIGH STRENGTH ALUMINUM ALLOYS.
BALL BEARING ARE 440 CRES.

JONATHAN® Engineered Solutions

Irvine Technology Center
410 Exchange, Suite 200
Irvine, CA 92602
Tel. (714) 665-4400
Fax: (714) 368-7002
Website: www.jonathanengr.com
Engineer - Production - Integration/ Subassembly - Logistics
United States - Mexico - China - Taiwan

TOLERANCES UNLESS OTHERWISE NOTED				PART NUMBER :	DESCRIPTION :
.XX	.XXX	ANGLE	HOLES	250QD	ALUMINUM 250QD LOAD RATING: 45-110 lbs
± .01	± .005	± 1°	± .005	DATE : 1/11	
SHEET 1 OF 1					

COPYRIGHT © 2011 JONATHAN ENGINEERED SOLUTIONS

NOTES:

1. SLIDE IS SYMMETRICAL. MAY BE USED AS LEFT OR RIGHT HAND SLIDE.

ORDERING INFO:

300–LENGTH (SLIDE WITHOUT LOCK)
300L–LENGTH (SLIDE WITH LOCK OPEN)
300LR–LENGTH (SLIDE WITH LOCK OPEN & FRONT RELEASE)

* WHEN USED AS PAIRS, DOUBLE LOAD RATING.

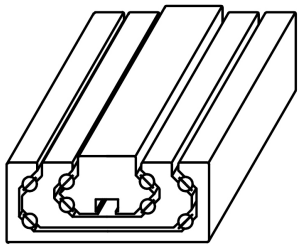

ISOMETRIC PRESENTATION SHOWN AS UNDERMOUNT LOAD RATING ON CHART

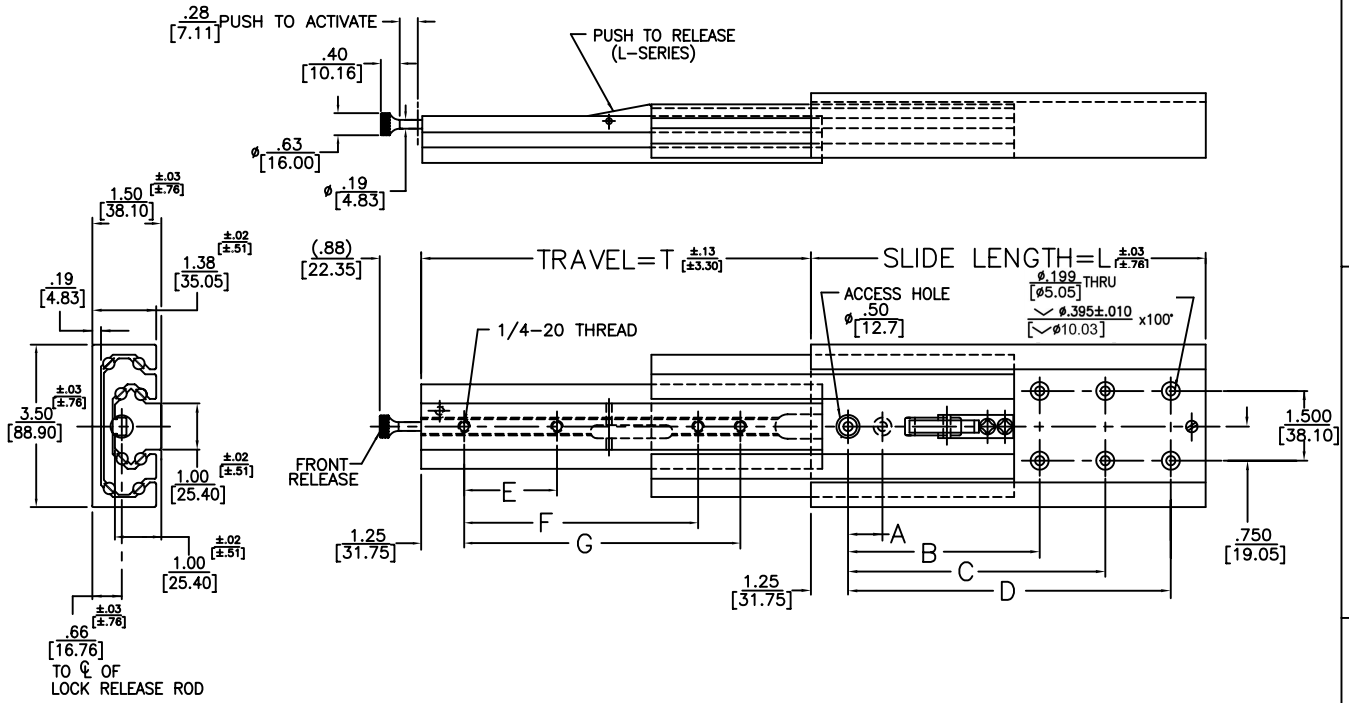

END VIEW

PART NO.	SLIDE LENGTH	SLIDE TRAVEL	MOUNTING HOLE PATTERN							LOAD RATING
SERIES – LENGTH	DIM. L	DIM. T	OUTER MEMBER A	B	C	D	INNER MEMBER E	F	G	* EACH
–14	14 355.6	13 330.2			7 177.8	12 304.8		7 177.8	11 279.4	258 LBS 117 KG
–16	16 406.4	15 381	3 76.2	8 203.2	11 279.4	14 355.6	3 76.2	8 203.2	13 330.2	261 LBS 118 KG
–18	18 457.2	17 431.8	4 101.6	10 254	13 330.2	16 406.4	4 101.6	9 228.6	15 381	260 LBS 117 KG
–20	20 508	19 482.6	5 127	10 254	14 355.6	18 457.2	5 127	11 279.4	17 431.8	255 LBS 115 KG
–22	22 558.8	21 533.4	6 152.4	12 304.8	16 406.4	20 508	6 152.4	12 304.8	19 482.6	249 LBS 112 KG
–24	24 609.6	23 584.2	6 152.4	12 304.8	17 431.8	22 558.8	7 177.8	14 355.6	21 533.4	241 LBS 109 KG
–26	26 660.4	25 635	7 177.8	14 355.6	19 482.6	24 609.6	8 203.2	15 381	23 584.2	234 LBS 106 KG
–28	28 711.2	27 685.8	7 177.8	14 355.6	20 508	26 660.4	9 228.6	17 431.8	25 635	228 LBS 103 KG
–30	30 762	29 736.6	8 203.2	16 406.4	22 558.8	28 711.2	9 228.6	18 457.2	27 685.8	223 LBS 101 KG
–32	32 812.8	31 787.4	8 203.2	16 406.4	23 584.2	30 762	10 254	20 508	29 736.6	218 LBS 98 KG
–34	34 863.6	33 838.2	9 228.6	18 457.2	25 635	32 812.8	10 254	21 533.4	31 787.4	212 LBS 96 KG
–36	36 914.4	35 889	9 228.6	18 457.2	26 660.4	34 863.6	11 279.4	22 558.8	33 838.2	205 LBS 92 KG

JONATHAN® Engineered Solutions
Irvine Technology Center
410 Exchange, Suite 200
Irvine, CA 92602
Tel: (714) 665–4400
Website: www.JonathanEngr.com
Engineering • Production • Integration/Subassembly • Logistics
United States • Mexico • China • Taiwan

DIMENSIONS SHOWN AS: IN. [MM]	TOLERANCE UNLESS OTHERWISE NOTED
.XX / .X	±.010 [±.3]
.XXX / .XX	±.005 [±.13]
ANGLES	±1°

SERIES: 300

DATE: 1/11

DESCRIPTION:
ALUMINUM
SERIES 300 (UNDERMOUNT)
LOAD RATING: 205–261 LBS./ 92–118 KG.

COPYRIGHT © 2011 JONATHAN ENGINEERED SOLUTIONS

NOTES:

1. SLIDE IS SYMMETRICAL. MAY BE USED AS LEFT OR RIGHT HAND SLIDE.
2. SLIDE IS PROVIDED WITH TYPE 2 SHOCKBLOCKS.

ORDERING INFO:

300SB–LENGTH (SLIDE WITHOUT LOCK)
300SBL–LENGTH (SLIDE WITH LOCK OPEN)
300SBLR–LENGTH (SLIDE WITH LOCK OPEN & FRONT RELEASE)
* WHEN USED AS PAIRS, DOUBLE LOAD RATING.

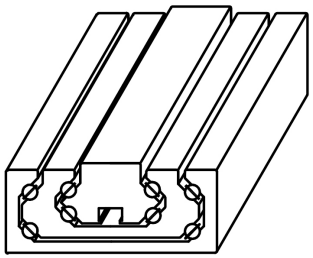

ISOMETRIC PRESENTATION SHOWN AS UNDERMOUNT LOAD RATING ON CHART

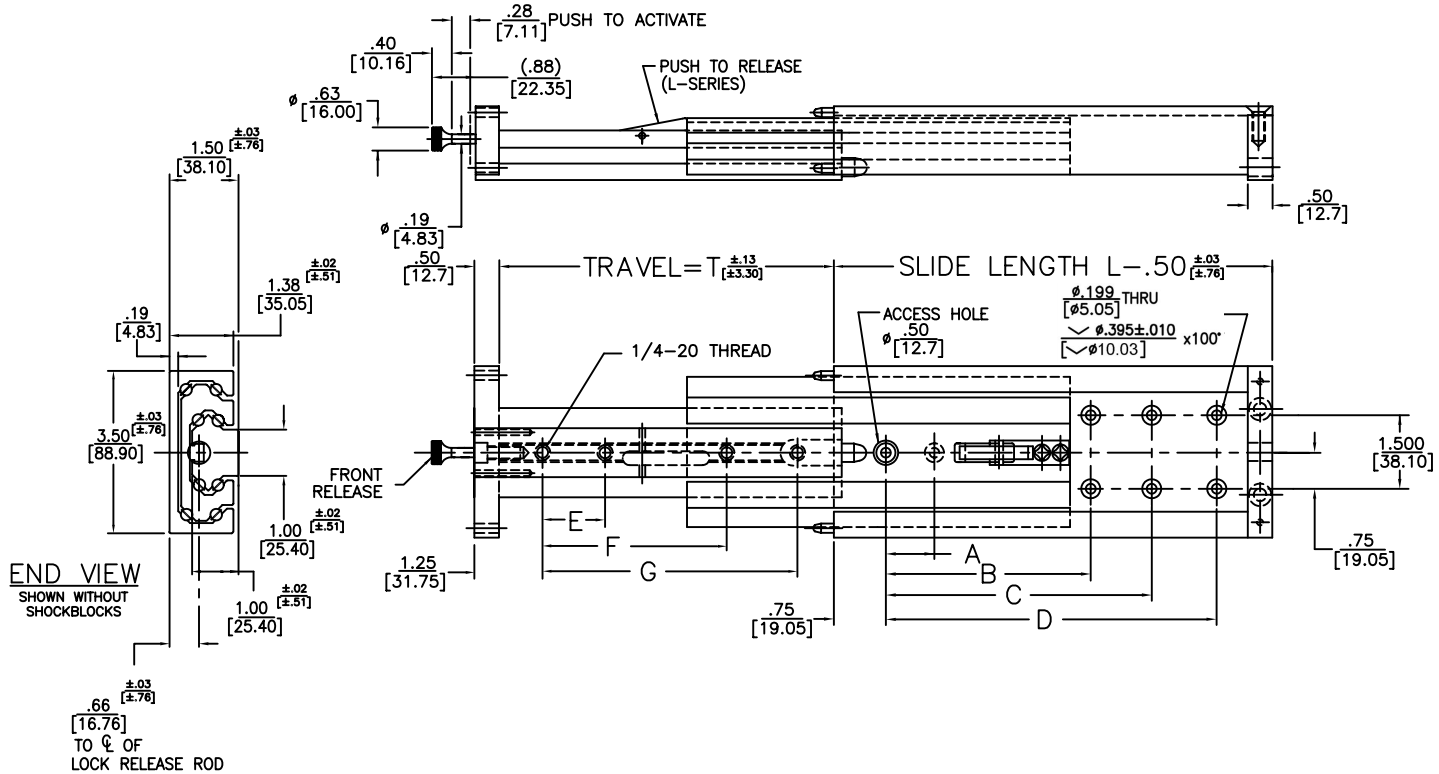

PART NO.	SLIDE LENGTH	SLIDE TRAVEL	MOUNTING HOLE PATTERN							LOAD RATING
			OUTER MEMBER				INNER MEMBER			
SERIES – LENGTH	DIM. L	DIM. T	A	B	C	D	E	F	G	* EACH
–14	14 / 355.6	13 / 330.2			7 / 177.8	12 / 304.8		7 / 177.8	11 / 279.4	250 LBS / 113 KG
–16	16 / 406.4	15 / 381	3 / 76.2	8 / 203.2	11 / 279.4	14 / 355.6	3 / 76.2	8 / 203.2	13 / 330.2	252 LBS / 114 KG
–18	18 / 457.2	17 / 431.8	4 / 101.6	10 / 254	13 / 330.2	16 / 406.4	4 / 101.6	9 / 228.6	15 / 381	249 LBS / 112 KG
–20	20 / 508	19 / 482.6	5 / 127	10 / 254	14 / 355.6	18 / 457.2	5 / 127	11 / 279.4	17 / 431.8	245 LBS / 111 KG
–22	22 / 558.8	21 / 533.4	6 / 152.4	12 / 304.8	16 / 406.4	20 / 508	6 / 152.4	12 / 304.8	19 / 482.6	239 LBS / 108 KG
–24	24 / 609.6	23 / 584.2	6 / 152.4	12 / 304.8	17 / 431.8	22 / 558.8	7 / 177.8	14 / 355.6	21 / 533.4	232 LBS / 105 KG
–26	26 / 660.4	25 / 635	7 / 177.8	14 / 355.6	19 / 482.6	24 / 609.6	8 / 203.2	15 / 381	23 / 584.2	226 LBS / 102 KG
–28	28 / 711.2	27 / 685.8	7 / 177.8	14 / 355.6	20 / 508	26 / 660.4	9 / 228.6	17 / 431.8	25 / 635	221 LBS / 100 KG
–30	30 / 762	29 / 736.6	8 / 203.2	16 / 406.4	22 / 558.8	28 / 711.2	9 / 228.6	18 / 457.2	27 / 685.8	217 LBS / 98 KG
–32	32 / 812.8	31 / 787.4	8 / 203.2	16 / 406.4	23 / 584.2	30 / 762	10 / 254	20 / 508	29 / 736.6	212 LBS / 96 KG
–34	34 / 863.6	33 / 838.2	9 / 228.6	18 / 457.2	25 / 635	32 / 812.8	10 / 254	21 / 533.4	31 / 787.4	205 LBS / 92 KG
–36	36 / 914.4	35 / 889	9 / 228.6	18 / 457.2	26 / 660.4	34 / 863.6	11 / 279.4	22 / 558.8	33 / 838.2	198 LBS / 89 KG

JONATHAN® Engineered Solutions
Irvine Technology Center
410 Exchange, Suite 200
Irvine, CA 92602
Tel: (714) 665–4400
Website: www.JonathanEngr.com
Engineering • Production • Integration/Subassembly • Logistics
United States • Mexico • China • Taiwan

DIMENSIONS SHOWN AS: IN. / [MM]	TOLERANCE UNLESS OTHERWISE NOTED	SERIES	DESCRIPTION:
.XX / .X	±.010 [±.3]	300SB	ALUMINUM
.XXX / .XX	±.005 [±.13]	DATE: 1/11	SERIES 300SB (UNDERMOUNT)
ANGLES	±1°		LOAD RATING: 198–252 LBS./ 89–114 KG.

COPYRIGHT © 2011 JONATHAN ENGINEERED SOLUTIONS

NOTES:

1. SLIDE IS SYMMETRICAL. MAY BE USED AS LEFT OR RIGHT HAND SLIDE.
2. SLIDE IS PROVIDED WITH QUICK DISCONNECT "T" SECTION.
3. CABINET SECTION AND CHASSIS SECTION (T-SECTION) MAY BE PURCHASED SEPARATELY AND ARE INTERCHANGEABLE. CONTACT JONATHAN FOR ORDERING INSTRUCTIONS.

ORDERING INFO:

300T-LENGTH (SLIDE WITHOUT LOCK)
300TL-LENGTH (SLIDE WITH LOCK OPEN)
300TLR-LENGTH (SLIDE WITH LOCK OPEN & FRONT RELEASE)

* WHEN USED AS PAIRS, DOUBLE LOAD RATING.

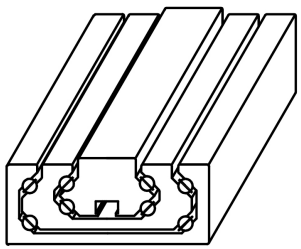

ISOMETRIC PRESENTATION SHOWN AS UNDERMOUNT LOAD RATING ON CHART

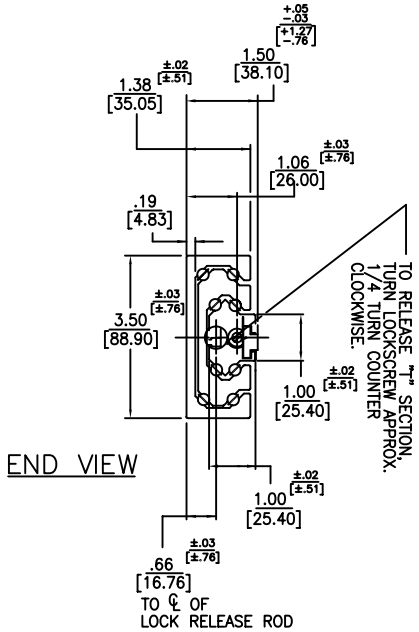

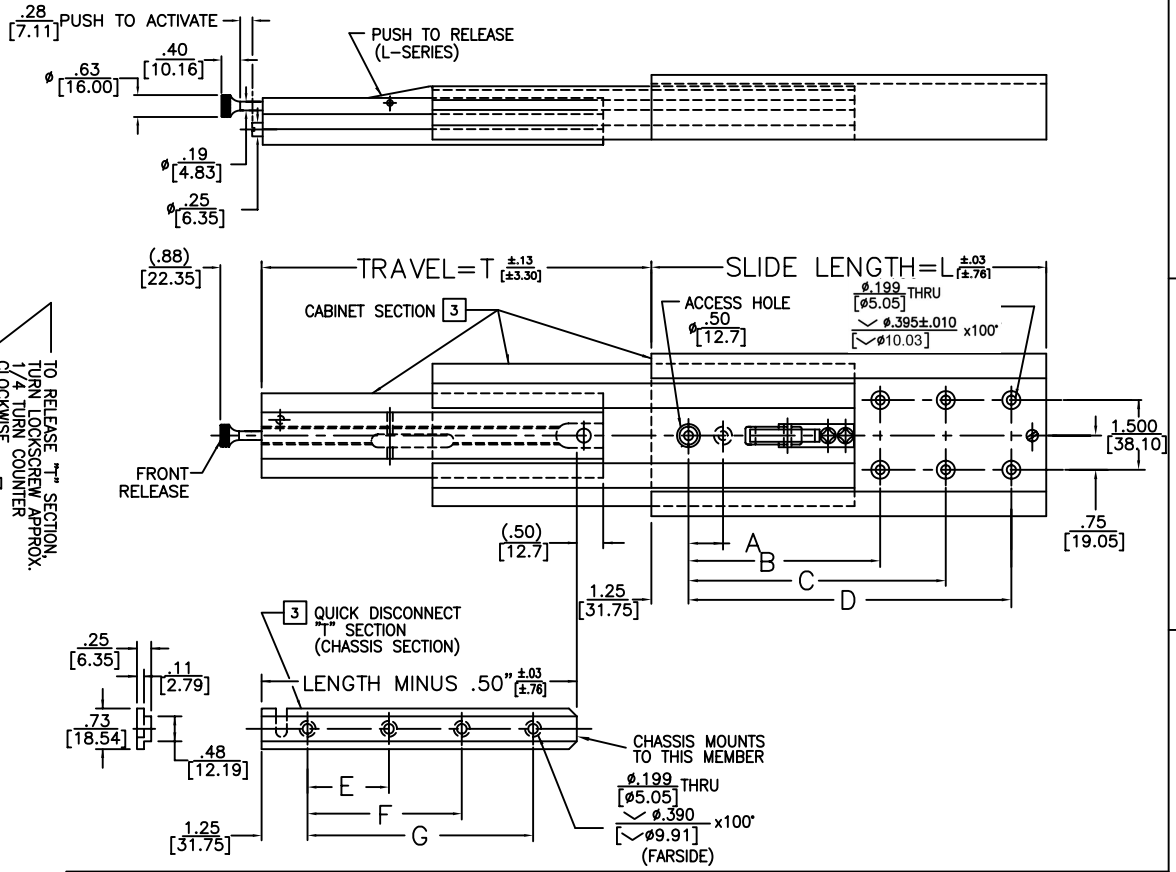

PART NO.	SLIDE LENGTH	SLIDE TRAVEL	MOUNTING HOLE PATTERN							LOAD RATING
SERIES – LENGTH	DIM. L	DIM. T	OUTER MEMBER A	B	C	D	"T" SECTION E	F	G	* EACH
-14	14 / 355.6	13 / 330.2			7 / 177.8	12 / 304.8		7 / 177.8	11 / 279.4	258 LBS / 117 KG
-16	16 / 406.4	15 / 381	3 / 76.2	8 / 203.2	11 / 279.4	14 / 355.6	3 / 76.2	8 / 203.2	13 / 330.2	261 LBS / 118 KG
-18	18 / 457.2	17 / 431.8	4 / 101.6	10 / 254	13 / 330.2	16 / 406.4	4 / 101.6	9 / 228.6	15 / 381	260 LBS / 117 KG
-20	20 / 508	19 / 482.6	5 / 127	10 / 254	14 / 355.6	18 / 457.2	5 / 127	11 / 279.4	17 / 431.8	255 LBS / 115 KG
-22	22 / 558.8	21 / 533.4	6 / 152.4	12 / 304.8	16 / 406.4	20 / 508	6 / 152.4	12 / 304.8	19 / 482.6	249 LBS / 112 KG
-24	24 / 609.6	23 / 584.2	6 / 152.4	12 / 304.8	17 / 431.8	22 / 558.8	7 / 177.8	14 / 355.6	21 / 533.4	241 LBS / 109 KG
-26	26 / 660.4	25 / 635	7 / 177.8	14 / 355.6	19 / 482.6	24 / 609.6	8 / 203.2	15 / 381	23 / 584.2	234 LBS / 106 KG
-28	28 / 711.2	27 / 685.8	7 / 177.8	14 / 355.6	20 / 508	26 / 660.4	9 / 228.6	17 / 431.8	25 / 635	228 LBS / 103 KG
-30	30 / 762	29 / 736.6	8 / 203.2	16 / 406.4	22 / 558.8	28 / 711.2	9 / 228.6	18 / 457.2	27 / 685.8	223 LBS / 101 KG
-32	32 / 812.8	31 / 787.4	8 / 203.2	16 / 406.4	23 / 584.2	30 / 762	10 / 254	20 / 508	29 / 736.6	218 LBS / 98 KG
-34	34 / 863.6	33 / 838.2	9 / 228.6	18 / 457.2	25 / 635	32 / 812.8	10 / 254	21 / 533.4	31 / 787.4	212 LBS / 96 KG
-36	36 / 914.4	35 / 889	9 / 228.6	18 / 457.2	26 / 660.4	34 / 863.6	11 / 279.4	22 / 558.8	33 / 838.2	205 LBS / 92 KG

JONATHAN® Engineered Solutions
Irvine Technology Center
410 Exchange, Suite 200
Irvine, CA 92602
Tel: (714) 665-4400
Website: www.JonathanEngr.com
Engineering • Production • Integration/Subassembly • Logistics
United States • Mexico • China • Taiwan

DIMENSIONS SHOWN AS: IN. / [MM]

TOLERANCE UNLESS OTHERWISE NOTED	
.XX / .X	±.010 [±.3]
.XXX / .XX	±.005 [±.13]
ANGLES	±1°

SERIES: 300T

DATE: 1/11

DESCRIPTION:
ALUMINUM
SERIES 300T
LOAD RATING: 205-261 LBS./ 92-118 KG.

COPYRIGHT © 2011 JONATHAN ENGINEERED SOLUTIONS

NOTES:

1. WHEN ORDERING WITH LOCK, SPECIFY L.H. OR R.H. (EX: 350L–12L, 350L–12R) (LEFT SLIDE AS SHOWN, RIGHT SLIDE OPPOSITE)

2. SLIDE IS PROVIDED WITH LOCK TYPE "E". LOCKS IN OPEN POSITION ONLY. (OPTIONAL)

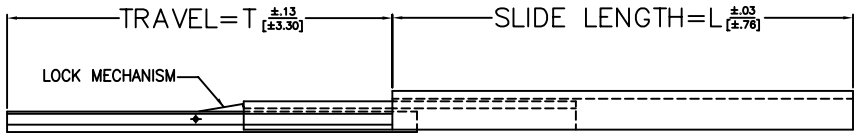

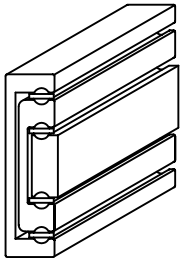

ISOMETRIC REPRESENTATION

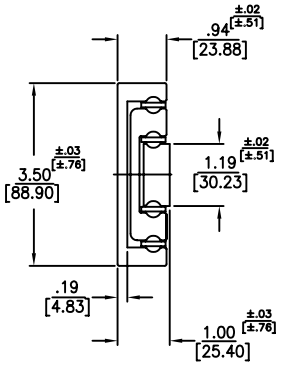

END VIEW

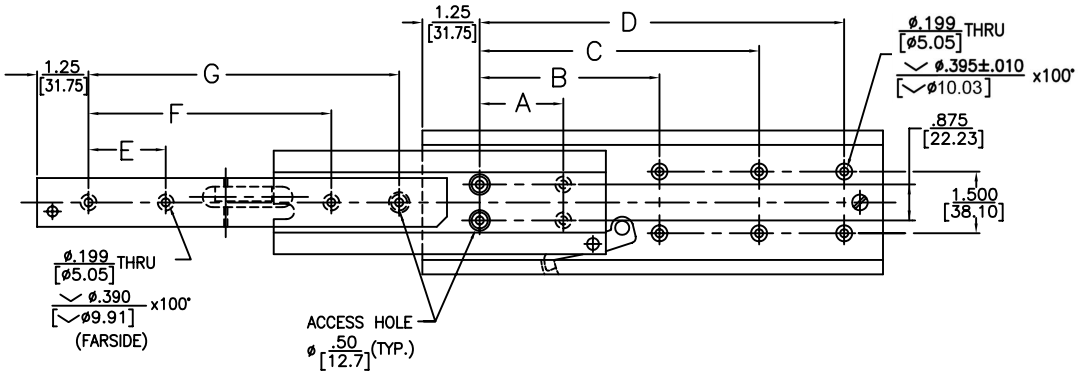

PART NO.	SLIDE LENGTH	SLIDE TRAVEL	MOUNTING HOLE PATTERN							LOAD RATING
SERIES – LENGTH	DIM. L	DIM. T	OUTER MEMBER A	B	C	D	INNER MEMBER E	F	G	PER PAIR
350–12	12	11			6	10		5	9	460 LBS
350L–12	304.8	279.4			152.4	254		127	228.6	208 KG
350–14	14	13			7	12	3	7	11	458 LBS
350L–14	355.6	330.2			177.8	304.8	76.2	177.8	279.4	207 KG
350–16	16	15	4	8	11	14	4	8	13	425 LBS
350L–16	406.4	381	101.6	203.2	279.4	355.6	101.6	203.2	330.2	192 KG
350–18	18	17	5	10	13	16	5	10	15	375 LBS
350L–18	457.2	431.8	127	254	330.2	406.4	127	254	381	170 KG
350–20	20	19	5	10	14	18	5	11	17	340 LBS
350L–20	508	482.6	127	254	355.6	457.2	127	279.4	431.8	154 KG
350–22	22	21	6	12	16	20	6	12	19	315 LBS
350L–22	558.8	533.4	152.4	304.8	406.4	508	152.4	304.8	482.6	142 KG
350–24	24	23	6	12	17	22	7	14	21	295 LBS
350L–24	609.6	584.2	152.4	304.8	431.8	558.8	177.8	355.6	533.4	133 KG
350–26	26	25	7	14	19	24	7	15	23	280 LBS
350L–26	660.4	635	177.8	355.6	482.6	609.6	177.8	381	584.2	127 KG
350–28	28	27	7	14	20	26	8	16	25	270 LBS
350L–28	711.2	685.8	177.8	355.6	508	660.4	203.2	406.4	635	122 KG
350–30	30	29	8	16	22	28	9	18	27	265 LBS
350L–30	762	736.6	203.2	406.4	558.8	711.2	228.6	457.2	685.8	120 KG
350–32	32	31	8	16	23	30	9	19	29	255 LBS
350L–32	812.8	787.4	203.2	406.4	584.2	762	228.6	482.6	736.6	115 KG
350–34	34	33	9	18	25	32	10	20	31	247 LBS
350L–34	863.6	838.2	228.6	457.2	635	812.8	254	508	787.4	112 KG
350–36	36	35	9	18	26	34	11	22	33	240 LBS
350L–36	914.4	889	228.6	457.2	660.4	863.6	279.4	558.8	838.2	108 KG

JONATHAN® Engineered Solutions

Irvine Technology Center
410 Exchange, Suite 200
Irvine, CA 92602
Tel: (714) 665–4400
Website: www.JonathanEngr.com
Engineering • Production • Integration/Subassembly • Logistics
United States • Mexico • China • Taiwan

DIMENSIONS SHOWN AS: IN. [MM]	TOLERANCE UNLESS OTHERWISE NOTED
.XX / .X	±.010 [±.3]
.XXX / .XX	±.005 [±.13]
ANGLES	±1°

SERIES: 350

DATE: 1/11

DESCRIPTION:

ALUMINUM
SERIES 350
LOAD RATING: 240–460 LBS./ 108–208 KG.

COPYRIGHT © 2011 JONATHAN ENGINEERED SOLUTIONS

NOTES:

1. WHEN ORDERING WITH LOCK, SPECIFY L.H. OR R.H. (EX: DR350L–12L, DR350L–12R) (LEFT SLIDE AS SHOWN, RIGHT SLIDE OPPOSITE)
2. SLIDE IS PROVIDED WITH LOCK TYPE "E". LOCKS IN OPEN POSITION ONLY. (OPTIONAL)

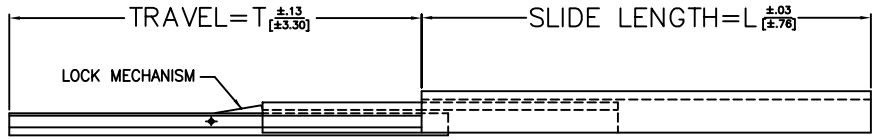

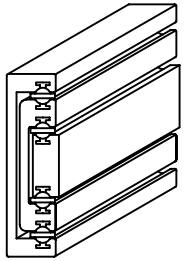

ISOMETRIC REPRESENTATION

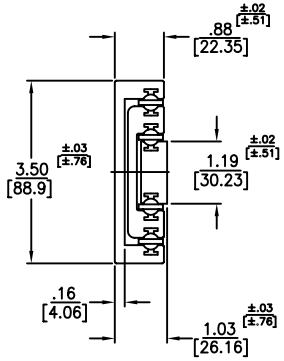

END VIEW

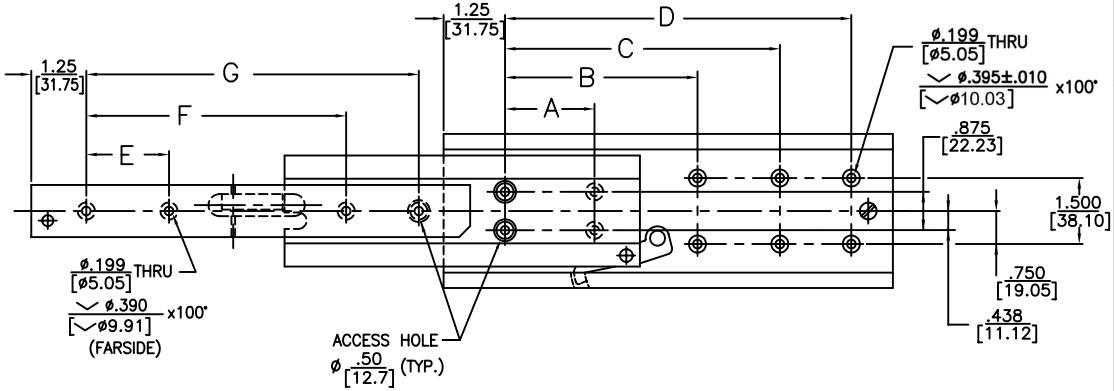

PART NO.	SLIDE LENGTH	SLIDE TRAVEL	MOUNTING HOLE PATTERN							LOAD RATING
SERIES – LENGTH	DIM. L	DIM. T	OUTER MEMBER A	B	C	D	INNER MEMBER E	F	G	PER PAIR
DR350–12	12	11			6	10		5	9	500 LBS
DR350L–12	304.8	279.4			152.4	254		127	228.6	226 KG
DR350–14	14	13			7	12	3	7	11	500 LBS
DR350L–14	355.6	330.2			177.8	304.8	76.2	177.8	279.4	226 KG
DR350–16	16	15	4	8	11	14	4	8	13	500 LBS
DR350L–16	406.4	381	101.6	203.2	279.4	355.6	101.6	203.2	330.2	226 KG
DR350–18	18	17	5	10	13	16	5	10	15	500 LBS
DR350L–18	457.2	431.8	127	254	330.2	406.4	127	254	381	226 KG
DR350–20	20	19	5	10	14	18	5	11	17	460 LBS
DR350L–20	508	482.6	127	254	355.6	457.2	127	279.4	431.8	208 KG
DR350–22	22	21	6	12	16	20	6	12	19	420 LBS
DR350L–22	558.8	533.4	152.4	304.8	406.4	508	152.4	304.8	482.6	190 KG
DR350–24	24	23	6	12	17	22	7	14	21	395 LBS
DR350L–24	609.6	584.2	152.4	304.8	431.8	558.8	177.8	355.6	533.4	179 KG
DR350–26	26	25	7	14	19	24	7	15	23	380 LBS
DR350L–26	660.4	635	177.8	355.6	482.6	609.6	177.8	381	584.2	172 KG
DR350–28	28	27	7	14	20	26	8	16	25	365 LBS
DR350L–28	711.2	685.8	177.8	355.6	508	660.4	203.2	406.4	635	165 KG
DR350–30	30	29	8	16	22	28	9	18	27	350 LBS
DR350L–30	762	736.6	203.2	406.4	558.8	711.2	228.6	457.2	685.8	158 KG
DR350–32	32	31	8	16	23	30	9	19	29	325 LBS
DR350L–32	812.8	787.4	203.2	406.4	584.2	762	228.6	482.6	736.6	147 KG
DR350–34	34	33	9	18	25	32	10	20	31	305 LBS
DR350L–34	863.6	838.2	228.6	457.2	635	812.8	254	508	787.4	138 KG
DR350–36	36	35	9	18	26	34	11	22	33	280 LBS
DR350L–36	914.4	889	228.6	457.2	660.4	863.6	279.4	558.8	838.2	127 KG

JONATHAN® Engineered Solutions
Irvine Technology Center
410 Exchange, Suite 200
Irvine, CA 92602
Tel: (714) 665–4400
Website: www.JonathanEngr.com
Engineering • Production • Integration/Subassembly Logistics
United States • Mexico • China • Taiwan

DIMENSIONS SHOWN AS: IN. [MM]	TOLERANCE UNLESS OTHERWISE NOTED
.XX / .X	±.010 [±.3]
.XXX / .XX	±.005 [±.13]
ANGLES	±1°

SERIES: DR350

DATE: 1/11

DESCRIPTION:

ALUMINUM
SERIES DR350 (DYNARACE)
LOAD RATING: 280–500 LBS./ 127–226 KG.

COPYRIGHT © 2011 JONATHAN ENGINEERED SOLUTIONS

NOTES:

1. LEFT SLIDE AS SHOWN, RIGHT SLIDE OPPOSITE.
2. FOR LOCK OPEN CONTACT JONATHAN.

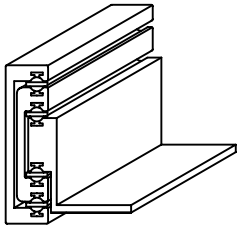

ISOMETRIC REPRESENTATION

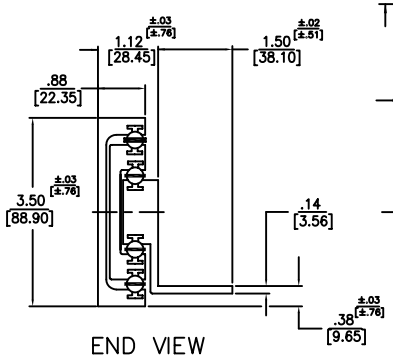

END VIEW

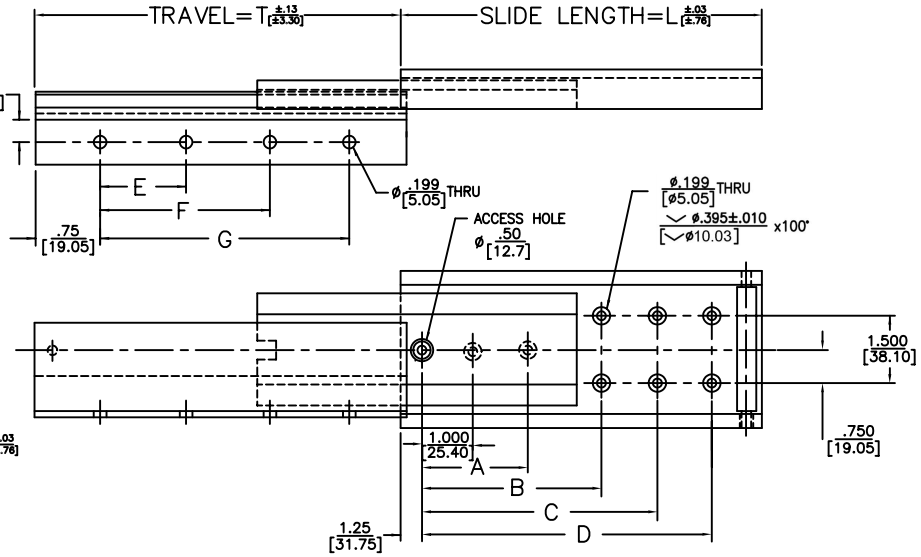

PART NO.	SLIDE LENGTH	SLIDE TRAVEL	MOUNTING HOLE PATTERN							LOAD RATING
SERIES – LENGTH	DIM. L	DIM. T	OUTER MEMBER A	B	C	D	INNER MEMBER E	F	G	PER PAIR
DR351–12	12 / 304.8	11 / 279.4			5 / 127	10 / 254	3 / 76.2	7 / 177.8	10 / 254	500 LBS / 226 KG
DR351–14	14 / 355.6	13 / 330.2			6 / 152.4	12 / 304.8	4 / 101.6	8 / 203.2	12 / 304.8	500 LBS / 226 KG
DR351–16	16 / 406.4	15 / 381			7 / 177.8	14 / 355.6	5 / 127	9 / 228.6	14 / 355.6	500 LBS / 226 KG
DR351–18	18 / 457.2	17 / 431.8			8 / 203.2	16 / 406.4	5 / 127	11 / 279.4	16 / 406.4	500 LBS / 226 KG
DR351–20	20 / 508	19 / 482.6			9 / 228.6	18 / 457.2	6 / 152.4	12 / 304.8	18 / 457.2	460 LBS / 208 KG
DR351–22	22 / 558.8	21 / 533.4	5 / 127	10 / 254	15 / 381	20 / 508	7 / 177.8	13 / 330.2	20 / 508	420 LBS / 190 KG
DR351–24	24 / 609.6	23 / 584.2	5 / 127	11 / 279.4	17 / 431.8	22 / 558.8	7 / 177.8	15 / 381	22 / 558.8	395 LBS / 179 KG
DR351–26	26 / 660.4	25 / 635	6 / 152.4	12 / 304.8	18 / 457.2	24 / 609.6	8 / 203.2	16 / 406.4	24 / 609.6	380 LBS / 172 KG
DR351–28	28 / 711.2	27 / 685.8	6 / 152.4	13 / 330.2	20 / 508	26 / 660.4	9 / 228.6	17 / 431.8	26 / 660.4	365 LBS / 165 KG
DR351–30	30 / 762	29 / 736.6	7 / 177.8	14 / 355.6	21 / 533.4	28 / 711.2	9 / 228.6	19 / 482.6	28 / 711.2	350 LBS / 158 KG
DR351–32	32 / 812.8	31 / 787.4	7 / 177.8	15 / 381	23 / 584.2	30 / 762	10 / 254	20 / 508	30 / 762	325 LBS / 147 KG
DR351–34	34 / 863.6	33 / 838.2	8 / 203.2	16 / 406.4	24 / 609.6	32 / 812.8	11 / 279.4	21 / 533.4	32 / 812.8	305 LBS / 138 KG
DR351–36	36 / 914.4	35 / 889	8 / 203.2	17 / 431.8	26 / 660.4	34 / 863.6	11 / 279.4	23 / 584.2	34 / 863.6	280 LBS / 127 KG

JONATHAN® Engineered Solutions

Irvine Technology Center
410 Exchange, Suite 200
Irvine, CA 92602
Tel: (714) 665–4400
Website: www.jonathanengr.com
Engineering • Production • Integration/Subassembly • Logistics
United States • Mexico • China • Taiwan

DIMENSIONS SHOWN AS: IN. / [MM]	TOLERANCE UNLESS OTHERWISE NOTED
.XX / .X	±.010 [±.25]
.XXX / .XX	±.005 [±.13]
ANGLES	±1°

SERIES: DR351

DATE: 1/11

DESCRIPTION:

ALUMINUM
SERIES DR351 (DYNARACE)
LOAD RATING: 280–500 LBS./ 127–226 KG.

COPYRIGHT © 2011 JONATHAN ENGINEERED SOLUTIONS

NOTES:

1. LEFT SLIDE AS SHOWN, RIGHT SLIDE OPPOSITE.
2. BALL SPACERS ARE SHOCK ABSORBING NON-METALIC.

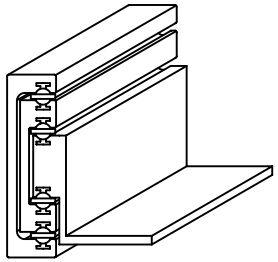

ISOMETRIC REPRESENTATION

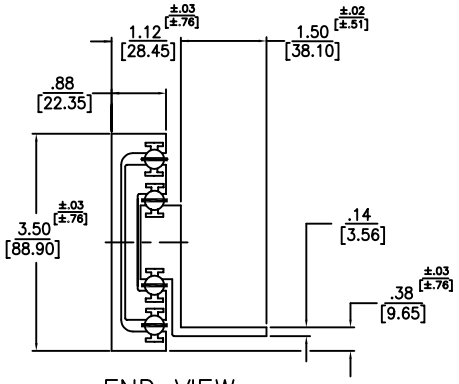

END VIEW

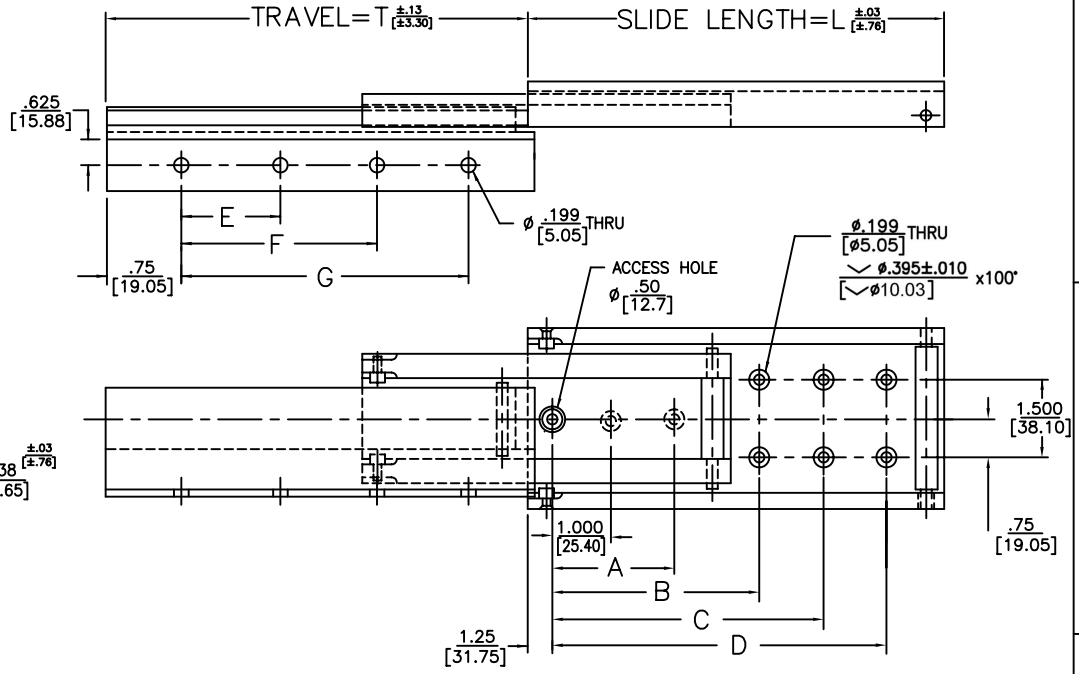

PART NO.	SLIDE LENGTH	SLIDE TRAVEL	MOUNTING HOLE PATTERN							LOAD RATING
SERIES – LENGTH	DIM. L	DIM. T	OUTER MEMBER A	OUTER MEMBER B	OUTER MEMBER C	OUTER MEMBER D	INNER MEMBER E	INNER MEMBER F	INNER MEMBER G	PER PAIR
DR351U–12	12 / 304.8	11 / 279.4			5 / 127	10 / 254	3 / 76.2	7 / 177.8	10 / 254	500 LBS / 226 KG
DR351U–14	14 / 355.6	13 / 330.2			6 / 152.4	12 / 304.8	4 / 101.6	8 / 203.2	12 / 304.8	500 LBS / 226 KG
DR351U–16	16 / 406.4	15 / 381			7 / 177.8	14 / 355.6	5 / 127	9 / 228.6	14 / 355.6	500 LBS / 226 KG
DR351U–18	18 / 457.2	17 / 431.8			8 / 203.2	16 / 406.4	5 / 127	11 / 279.4	16 / 406.4	500 LBS / 226 KG
DR351U–20	20 / 508	19 / 482.6			9 / 228.6	18 / 457.2	6 / 152.4	12 / 304.8	18 / 457.2	460 LBS / 208 KG
DR351U–22	22 / 558.8	21 / 533.4	5 / 127	10 / 254	15 / 381	20 / 508	7 / 177.8	13 / 330.2	20 / 508	420 LBS / 190 KG
DR351U–24	24 / 609.6	23 / 584.2	5 / 127	11 / 279.4	17 / 431.8	22 / 558.8	7 / 177.8	15 / 381	22 / 558.8	395 LBS / 179 KG
DR351U–26	26 / 660.4	25 / 635	6 / 152.4	12 / 304.8	18 / 457.2	24 / 609.6	8 / 203.2	16 / 406.4	24 / 609.6	380 LBS / 172 KG
DR351U–28	28 / 711.2	27 / 685.8	6 / 152.4	13 / 330.2	20 / 508	26 / 660.4	9 / 228.6	17 / 431.8	26 / 660.4	365 LBS / 165 KG
DR351U–30	30 / 762	29 / 736.6	7 / 177.8	14 / 355.6	21 / 533.4	28 / 711.2	9 / 228.6	19 / 482.6	28 / 711.2	350 LBS / 158 KG
DR351U–32	32 / 812.8	31 / 787.4	7 / 177.8	15 / 381	23 / 584.2	30 / 762	10 / 254	20 / 508	30 / 762	325 LBS / 147 KG
DR351U–34	34 / 863.6	33 / 838.2	8 / 203.2	16 / 406.4	24 / 609.6	32 / 812.8	11 / 279.4	21 / 533.4	32 / 812.8	305 LBS / 138 KG
DR351U–36	36 / 914.4	35 / 889	8 / 203.2	17 / 431.8	26 / 660.4	34 / 863.6	11 / 279.4	23 / 584.2	34 / 863.6	280 LBS / 127 KG

JONATHAN® Engineered Solutions
Irvine Technology Center
410 Exchange, Suite 200
Irvine, CA 92602
Tel: (714) 665–4400
Website: www.JonathanEngr.com
Engineering • Production • Integration/Subassembly • Logistics
United States • Mexico • China • Taiwan

DIMENSIONS SHOWN AS: IN. / [MM]	TOLERANCE UNLESS OTHERWISE NOTED
.XX / .X	±.010 [±.3]
.XXX / .XX	±.005 [±.13]
ANGLES	±1°

SERIES: DR351U

DATE: 1/11

DESCRIPTION:

ALUMINUM
SERIES DR351U
LOAD RATING: 280–500 LBS./ 127–226 KG.

COPYRIGHT © 2011 JONATHAN ENGINEERED SOLUTIONS

NOTES:

1. SLIDE IS SYMMETRICAL. MAY BE USED AS LEFT OR RIGHT HAND SLIDE.

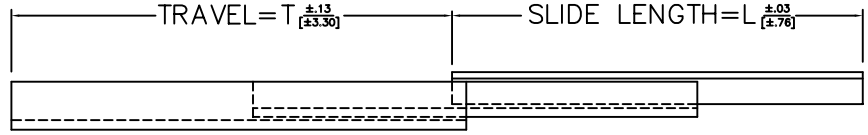

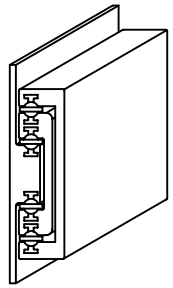

ISOMETRIC REPRESENTATION

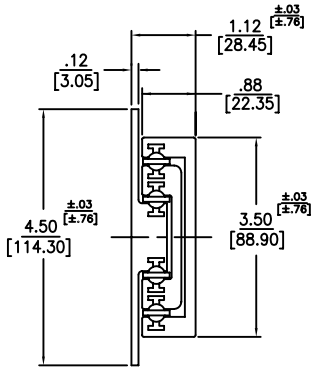

END VIEW

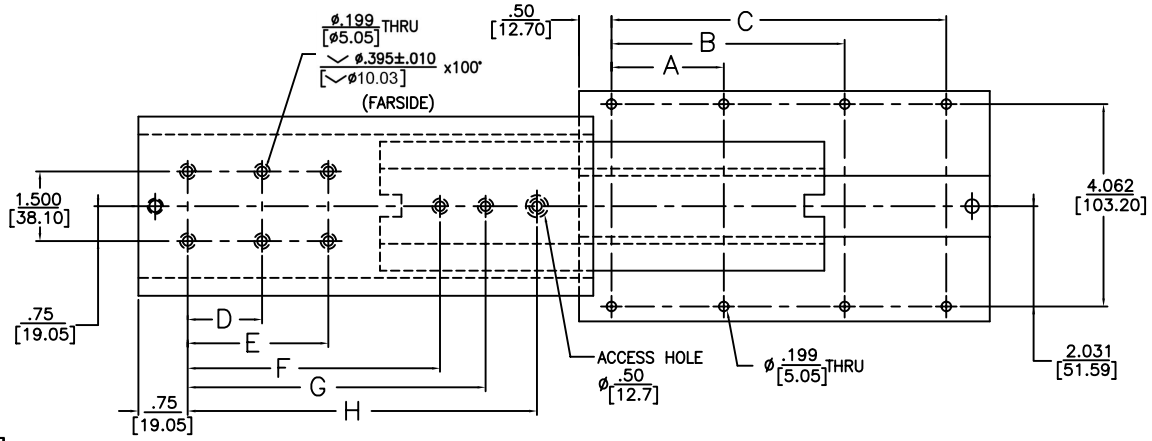

PART NO.	SLIDE LENGTH	SLIDE TRAVEL	MOUNTING HOLE PATTERN								LOAD RATING
SERIES LENGTH	DIM. L	DIM. T	INNER MEMBER A	B	C	OUTER MEMBER D	E	F	G	H	PER PAIR
DR353-12	12 / 304.8	11 / 279.4	3 / 76.2	8 / 203.2	11 / 279.4	4 / 101.6			9 / 228.6	10 / 254	500 LBS / 226 KG
DR353-14	14 / 355.6	13 / 330.2	4 / 101.6	9 / 228.6	13 / 330.2	5 / 127			11 / 279.4	12 / 304.8	500 LBS / 226 KG
DR353-16	16 / 406.4	15 / 381	5 / 127	10 / 254	15 / 381	3 / 76.2	6 / 152.4	10 / 254	13 / 330.2	14 / 355.6	500 LBS / 226 KG
DR353-18	18 / 457.2	17 / 431.8	6 / 152.4	11 / 279.4	17 / 431.8	3 / 76.2	7 / 177.8	11 / 279.4	15 / 381	16 / 406.4	500 LBS / 226 KG
DR353-20	20 / 508	19 / 482.6	6 / 152.4	13 / 330.2	19 / 482.6	4 / 101.6	8 / 203.2	13 / 330.2	17 / 431.8	18 / 457.2	460 LBS / 208 KG
DR353-22	22 / 558.8	21 / 533.4	7 / 177.8	14 / 355.6	21 / 533.4	4 / 101.6	9 / 228.6	14 / 355.6	19 / 482.6	20 / 508	420 LBS / 190 KG
DR353-24	24 / 609.6	23 / 584.2	8 / 203.2	15 / 381	23 / 584.2	5 / 127	10 / 254	16 / 406.4	21 / 533.4	22 / 558.8	395 LBS / 179 KG
DR353-26	26 / 660.4	25 / 635	8 / 203.2	17 / 431.8	25 / 635	5 / 127	11 / 279.4	17 / 431.8	23 / 584.2	24 / 609.6	380 LBS / 172 KG
DR353-28	28 / 711.2	27 / 685.8	9 / 228.6	18 / 457.2	27 / 685.8	6 / 152.4	12 / 304.8	19 / 482.6	25 / 635	26 / 660.4	365 LBS / 165 KG
DR353-30	30 / 762	29 / 736.6	10 / 254	19 / 482.6	29 / 736.6	6 / 152.4	13 / 330.2	20 / 508	27 / 685.8	28 / 711.2	350 LBS / 158 KG
DR353-32	32 / 812.8	31 / 787.4	10 / 254	21 / 533.4	31 / 787.4	7 / 177.8	14 / 355.6	22 / 558.8	29 / 736.6	30 / 762	325 LBS / 147 KG
DR353-34	34 / 863.6	33 / 838.2	11 / 279.4	22 / 558.8	33 / 838.2	7 / 177.8	15 / 381	23 / 584.2	31 / 787.4	32 / 812.8	305 LBS / 138 KG
DR353-36	36 / 914.4	35 / 889	12 / 304.8	23 / 584.2	35 / 889	8 / 203.2	16 / 406.4	25 / 635	33 / 838.2	34 / 863.6	280 LBS / 127 KG

JONATHAN® Engineered Solutions

Irvine Technology Center
410 Exchange, Suite 200
Irvine, CA 92602
Tel: (714) 665-4400
Website: www.JonathanEngr.com
Engineering • Production • Integration/Subassembly Logistics
United States • Mexico • China • Taiwan

DIMENSIONS SHOWN AS: IN. / [MM]	TOLERANCE UNLESS OTHERWISE NOTED	SERIES	DESCRIPTION:
.XX / .X	±.010 [±.3]	DR353	ALUMINUM
.XXX / .XX	±.005 [±.13]	DATE: 1/11	SERIES DR353
ANGLES	±1°		LOAD RATING: 280-500 LBS./ 127-226 KG.

COPYRIGHT © 2011 JONATHAN ENGINEERED SOLUTIONS

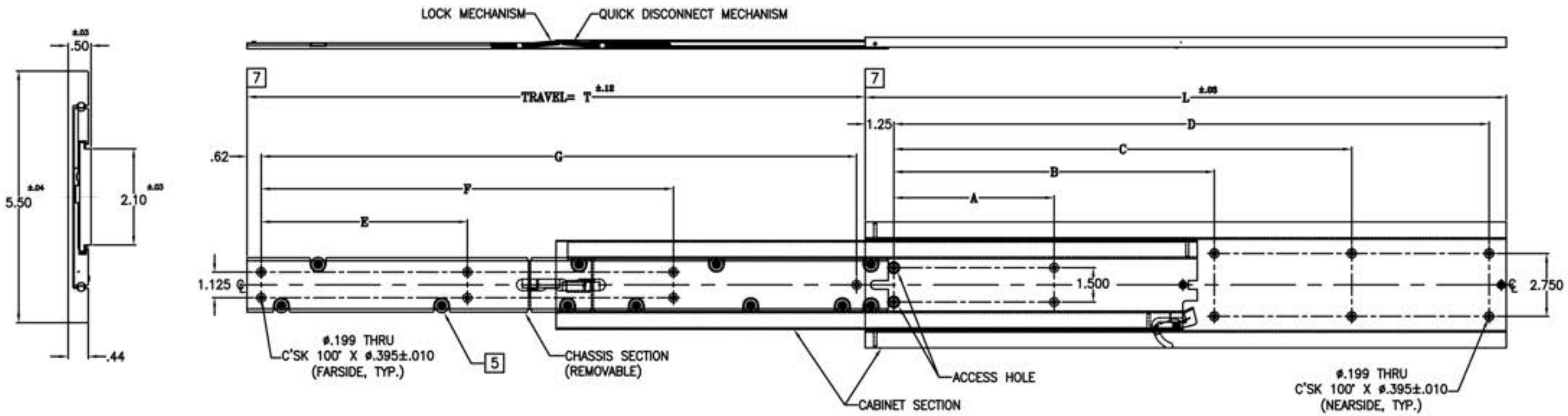

PART NO. SERIES LENGTH	SLIDE LENGTH DIM. L	SLIDE TRAVEL DIM. T	MOUNTING HOLE PATTERN CABINET SECTION A	B	C	D	CHASSIS SECTION E	F	G	LOAD RATING PER PAIR	SLIDE WEIGHT
600QD-10	10	9	–	–	5.000	8.000	–	6.000	8.000	515 LBS	2.31 LBS
600QD-11	11	10	–	–	5.000	9.000	–	7.000	9.000	510 LBS	2.55 LBS
600QD-12	12	11	–	–	6.000	10.000	–	7.000	10.000	505 LBS	2.78 LBS
600QD-13	13	12	–	–	6.000	11.000	–	8.000	11.000	500 LBS	3.02 LBS
600QD-14	14	13	–	–	7.000	12.000	4.000	8.000	12.000	500 LBS	3.25 LBS
600QD-15	15	14	–	–	7.000	13.000	4.000	9.000	13.000	495 LBS	3.48 LBS
600QD-16	16	15	4.000	8.000	11.000	14.000	4.000	9.000	14.000	490 LBS	3.70 LBS
600QD-17	17	16	5.000	9.000	12.000	15.000	5.000	10.000	15.000	490 LBS	3.94 LBS
600QD-18	18	17	5.000	10.000	13.000	16.000	5.000	10.000	16.000	485 LBS	4.17 LBS
600QD-19	19	18	5.000	10.000	13.000	17.000	5.000	12.000	17.000	480 LBS	4.40 LBS
600QD-20	20	19	5.000	10.000	14.000	18.000	4.000	12.000	18.000	475 LBS	4.63 LBS
600QD-21	21	20	6.000	12.000	15.000	19.000	6.000	13.000	19.000	470 LBS	4.86 LBS
600QD-22	22	21	6.000	12.000	16.000	20.000	7.000	14.000	20.000	465 LBS	5.09 LBS
600QD-23	23	22	6.000	12.000	16.000	21.000	7.000	14.000	21.000	460 LBS	5.35 LBS
600QD-24	24	23	6.000	12.000	17.000	22.000	8.000	15.000	22.000	450 LBS	5.60 LBS
600QD-25	25	24	7.000	14.000	18.000	23.000	8.000	15.000	23.000	445 LBS	5.81 LBS
600QD-26	26	25	7.000	14.000	19.000	24.000	8.000	16.000	24.000	440 LBS	6.02 LBS
600QD-27	27	26	7.000	14.000	19.000	25.000	8.000	17.000	25.000	430 LBS	6.28 LBS
600QD-28	28	27	7.000	14.000	20.000	26.000	9.000	18.000	26.000	425 LBS	6.53 LBS

7 THESE SURFACES ALIGN WHEN SLIDE IS IN THE CLOSED POSITION.

6. CABINET SECTION AND CHASSIS SECTION MAY BE PURCHASED SEPARATELY AND ARE INTERCHANGEABLE.

5 AMOUNT AND LOCATION OF ROLLERS TO BE DETERMINED BY JONATHAN ENGINEERING SOLUTIONS

4. SLIDE LOCKS IN OPEN POSITION AND IS PROVIDED WITH QUICK DISCONNECT OF CHASSIS SECTION.

3. LEFT HAND SHOWN, RIGHT HAND OPPOSITE

2. FINISH: CHANNELS ARE ANODIZED PER MIL-A-8625 TYPE II, CLASS 1. CRES PARTS PASSIVATED PER SAE-AMS-QQ-P-35.

1. MATERIAL: CHANNELS ARE FABRICATED FROM HIGH STRENGTH ALUMINUM ALLOYS WITH TENSILE STRENGTH OF 35,000 PSI MIN. (PER ASTM B221) COMPONENT PARTS ARE 302 OR 303 CRES AND HIGH STRENGTH ALUMINUM ALLOYS. BALL BEARING ARE 440 CRES.

JONATHAN® Engineered Solutions

Irvine Technology Center
410 Exchange, Suite 200
Irvine, CA 92602
Tel. (714) 665-4400
Fax: (714) 368-7002
Website: www.jonathanengr.com
Engineer - Production - Integration/ Subassembly - Logistics
United States - Mexico - China - Taiwan

TOLERANCES UNLESS OTHERWISE NOTED				PART NUMBER :	DESCRIPTION :
.XX	.XXX	ANGLE	HOLES	600QD	ALUMINUM SERIES 600QD
± .01	± .005	± 1°	± .005	DATE : 1/11	
SHEET 1 OF 1					

COPYRIGHT © 2011 JONATHAN ENGINEERED SOLUTIONS

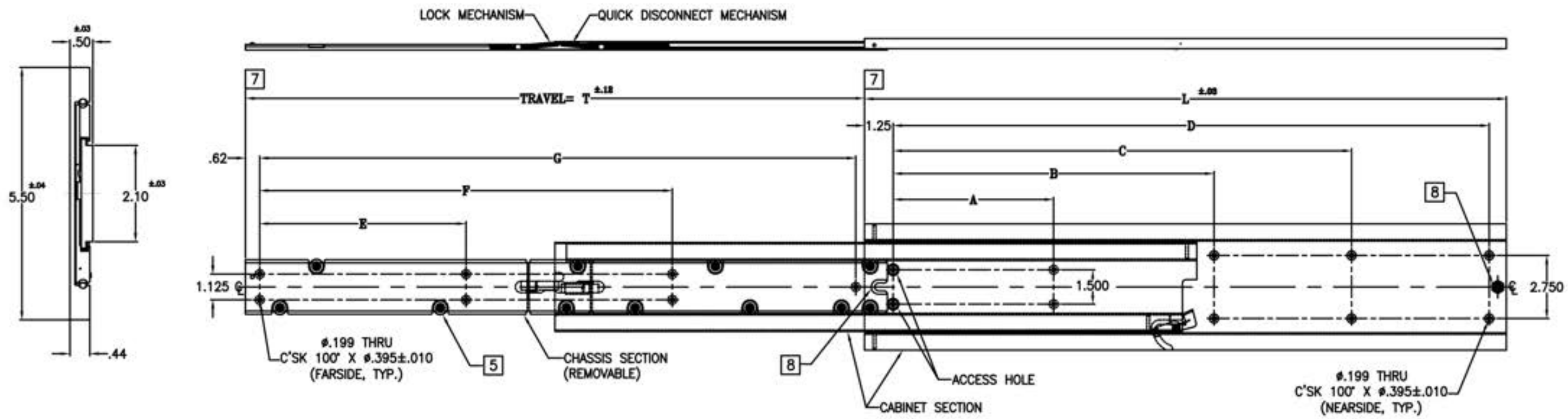

8 SLIDE IS PROVIDED WITH ADJUSTABLE REAR SHOCKBLOCK.

7 THESE SURFACES ALIGN WHEN SLIDE IS IN THE CLOSED POSITION.

6. CABINET SECTION AND CHASSIS SECTION MAY BE PURCHASED SEPARATELY AND ARE INTERCHANGEABLE.

5 AMOUNT AND LOCATION OF ROLLERS TO BE DETERMINED BY JONATHAN ENGINEERING SOLUTIONS

4. SLIDE LOCKS IN OPEN POSITION AND IS PROVIDED WITH QUICK DISCONNECT OF CHASSIS SECTION.

3. LEFT HAND SHOWN, RIGHT HAND OPPOSITE

2. FINISH: CHANNELS ARE ANODIZED PER MIL-A-8625 TYPE II, CLASS 1. CRES PARTS PASSIVATED PER SAE-AMS-QQ-P-35.

1. MATERIAL: CHANNELS ARE FABRICATED FROM HIGH STRENGTH ALUMINUM ALLOYS WITH TENSILE STRENGTH OF 35,000 PSI MIN. (PER ASTM B221) COMPONENT PARTS ARE 302 OR 303 CRES AND HIGH STRENGTH ALUMINUM ALLOYS. BALL BEARINGS ARE 440 CRES.

PART NO.	SLIDE LENGTH	SLIDE TRAVEL	MOUNTING HOLE PATTERN							LOAD RATING PER PAIR	SLIDE WEIGHT
SERIES – LENGTH	DIM. L	DIM. T	CABINET SECTION A	B	C	D	CHASSIS SECTION E	F	G		
600QDA-10	10	9	–	–	5.000	8.000	–	6.000	8.000	515 LBS	2.31 LBS
600QDA-11	11	10	–	–	5.000	9.000	–	7.000	9.000	510 LBS	2.55 LBS
600QDA-12	12	11	–	–	6.000	10.000	–	7.000	10.000	505 LBS	2.78 LBS
600QDA-13	13	12	–	–	6.000	11.000	–	8.000	11.000	500 LBS	3.02 LBS
600QDA-14	14	13	–	–	7.000	12.000	4.000	8.000	12.000	500 LBS	3.25 LBS
600QDA-15	15	14	–	–	7.000	13.000	4.000	9.000	13.000	495 LBS	3.48 LBS
600QDA-16	16	15	4.000	8.000	11.000	14.000	4.000	9.000	14.000	490 LBS	3.70 LBS
600QDA-17	17	16	5.000	9.000	12.000	15.000	5.000	10.000	15.000	490 LBS	3.94 LBS
600QDA-18	18	17	5.000	10.000	13.000	16.000	5.000	10.000	16.000	485 LBS	4.17 LBS
600QDA-19	19	18	5.000	10.000	13.000	17.000	5.000	12.000	17.000	480 LBS	4.40 LBS
600QDA-20	20	19	5.000	10.000	14.000	18.000	4.000	12.000	18.000	475 LBS	4.63 LBS
600QDA-21	21	20	6.000	12.000	15.000	19.000	6.000	13.000	19.000	470 LBS	4.86 LBS
600QDA-22	22	21	6.000	12.000	16.000	20.000	7.000	14.000	20.000	465 LBS	5.09 LBS
600QDA-23	23	22	6.000	12.000	16.000	21.000	7.000	14.000	21.000	460 LBS	5.35 LBS
600QDA-24	24	23	6.000	12.000	17.000	22.000	8.000	15.000	22.000	450 LBS	5.60 LBS
600QDA-25	25	24	7.000	14.000	18.000	23.000	8.000	15.000	23.000	445 LBS	5.81 LBS
600QDA-26	26	25	7.000	14.000	19.000	24.000	8.000	16.000	24.000	440 LBS	6.02 LBS
600QDA-27	27	26	7.000	14.000	19.000	25.000	8.000	17.000	25.000	430 LBS	6.28 LBS
600QDA-28	28	27	7.000	14.000	20.000	26.000	9.000	18.000	26.000	425 LBS	6.53 LBS

JONATHAN® Engineered Solutions

Irvine Technology Center
410 Exchange, Suite 200
Irvine, CA 92602
Tel. (714) 665-4400
Fax: (714) 368-7002
Website: www.jonathanengr.com
Engineer - Production - Integration/ Subassembly - Logistics
United States - Mexico - China - Taiwan

TOLERANCES UNLESS OTHERWISE NOTED				PART NUMBER :	DESCRIPTION :
.XX	.XXX	ANGLE	HOLES	600QDA	ALUMINUM SERIES 600QDA
± .01	± .005	± 1°	± .005	DATE : 1/11	
SHEET 1 OF 1					

COPYRIGHT © 2011 JONATHAN ENGINEERED SOLUTIONS

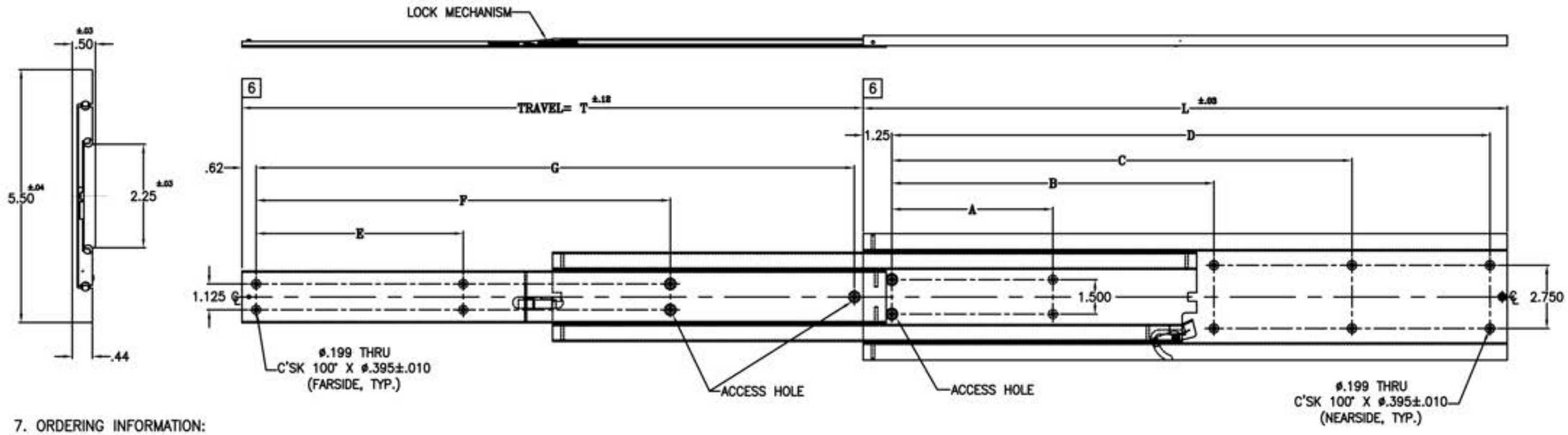

7. ORDERING INFORMATION:
   600–XX (SLIDE WITHOUT LOCK, XX = LENGTH OF SLIDE)
   600L–XXL (SLIDE WITH LOCK, LEFT HAND)
   600L–XXR (SLIDE WITH LOCK, RIGHT HAND)

   EX: 600–12 (SLIDE WITHOUT LOCK, 12" LONG)
   600L–12L (SLIDE WITH LOCK, 12" LONG, LEFT HAND)
   600L–12R (SLIDE WITH LOCK, 12" LONG, RIGHT HAND)

PART NO.	SLIDE LENGTH	SLIDE TRAVEL	MOUNTING HOLE PATTERN							LOAD RATING PER PAIR	SLIDE WEIGHT
SERIES – LENGTH	DIM. L	DIM. T	CABINET SECTION A	B	C	D	CHASSIS SECTION E	F	G		
600L–10	10	9	–	–	5.000	8.000	–	6.000	8.000	515 LBS	2.39 LBS
600L–11	11	10	–	–	5.000	9.000	–	7.000	9.000	510 LBS	2.63 LBS
600L–12	12	11	–	–	6.000	10.000	–	7.000	10.000	505 LBS	2.87 LBS
600L–13	13	12	–	–	6.000	11.000	–	8.000	11.000	500 LBS	3.10 LBS
600L–14	14	13	–	–	7.000	12.000	4.000	8.000	12.000	500 LBS	3.34 LBS
600L–15	15	14	–	–	7.000	13.000	4.000	9.000	13.000	495 LBS	3.58 LBS
600L–16	16	15	4.000	8.000	11.000	14.000	4.000	9.000	14.000	490 LBS	3.82 LBS
600L–17	17	16	5.000	9.000	12.000	15.000	5.000	10.000	15.000	490 LBS	4.06 LBS
600L–18	18	17	5.000	10.000	13.000	16.000	5.000	10.000	16.000	485 LBS	4.30 LBS
600L–19	19	18	5.000	10.000	13.000	17.000	5.000	12.000	17.000	480 LBS	4.54 LBS
600L–20	20	19	5.000	10.000	14.000	18.000	4.000	12.000	18.000	475 LBS	4.78 LBS
600L–21	21	20	6.000	12.000	15.000	19.000	6.000	13.000	19.000	470 LBS	5.02 LBS
600L–22	22	21	6.000	12.000	16.000	20.000	7.000	14.000	20.000	465 LBS	5.26 LBS
600L–23	23	22	6.000	12.000	16.000	21.000	7.000	14.000	21.000	460 LBS	5.50 LBS
600L–24	24	23	6.000	12.000	17.000	22.000	8.000	15.000	22.000	450 LBS	5.74 LBS
600L–25	25	24	7.000	14.000	18.000	23.000	8.000	15.000	23.000	445 LBS	5.98 LBS
600L–26	26	25	7.000	14.000	19.000	24.000	8.000	16.000	24.000	440 LBS	6.21 LBS
600L–27	27	26	7.000	14.000	19.000	25.000	8.000	17.000	25.000	430 LBS	6.52 LBS
600L–28	28	27	7.000	14.000	20.000	26.000	9.000	18.000	26.000	425 LBS	6.82 LBS

6 THESE SURFACES ALIGN WHEN SLIDE IS IN THE CLOSED POSITION.

5. SLIDE IS SOLID PACKED WITH BALLS.
4. SLIDE LOCKS IN OPEN POSITION (600L SERIES)
   SLIDE STOPS IN OPEN POSITION (600 SERIES)
3. LEFT HAND SHOWN, RIGHT HAND OPPOSITE (600L SERIES)
   SLIDE IS SYMMETRICAL (600 SERIES)
2. FINISH: CHANNELS ARE ANODIZED PER MIL–A–8625 TYPE II, CLASS 1. CRES PARTS PASSIVATED PER SAE–AMS–QQ–P–35.
1. MATERIAL: CHANNELS ARE FABRICATED FROM HIGH STRENGTH ALUMINUM ALLOYS WITH TENSILE STRENGTH OF 35,000 PSI MIN. (PER ASTM B221) COMPONENT PARTS ARE 302 OR 303 CRES AND HIGH STRENGTH ALUMINUM ALLOYS. BALL BEARING ARE 440 CRES.

JONATHAN® Engineered Solutions

Irvine Technology Center
410 Exchange, Suite 200
Irvine, CA 92602
Tel. (714) 665-4400
Fax: (714) 368-7002
Website: www.jonathanengr.com
Engineer - Production - Integration/ Subassembly - Logistics
United States - Mexico - China - Taiwan

TOLERANCES UNLESS OTHERWISE NOTED				PART NUMBER :	DESCRIPTION :
.XX	.XXX	ANGLE	HOLES	600, 600L	ALUMINUM SERIES 600,600L
± .01	± .005	± 1°	± .005	DATE : 1/11	
SHEET 1 OF 1					

COPYRIGHT © 2011 JONATHAN ENGINEERED SOLUTIONS